NOTE TO READERS:
The following 2013 Amended Yellowstone County Subdivision Regulations were adopted under County Resolution 13-95 on December 13, 2013. They were originally adopted under Resolution 06-81 on August 15, 2006 and subsequently amended under County Resolution 09-63 on October 13, 2009, County Resolution 11-95 on November 8, 2011, and County Resolution 12-102 on October 30, 2012.

Hard copies can be obtained from the City-County Planning Department.
Language mandated by State Law (76-3-101 et seq., MCA) is shown in **Arial** font text.
Language based on local laws and policies is shown in **Times New Roman** font text.

Yellowstone County Subdivision Regulations
Table of Contents

Page

Chapter 1.0 GENERAL PROVISIONS....5
Section 1.1 Title....5
Section 1.2 Authority....5
Section 1.3 Purpose....5
Section 1.4 Jurisdiction....6
Section 1.5 Exemptions for Certain Divisions of Land....7
Section 1.6 Construction Timing....7
Section 1.7 Transfers of Title....7
Section 1.8 Suitability of Land....8
Section 1.9 Permission to Enter....8
Section 1.10 Severability....8
Section 1.11 Regulations in Effect....8

Chapter 2.0 DEFINITIONS
Section 2.1 Definitions....10

Chapter 3.0 SUBDIVISION REVIEW PROCEDURES....20
Section 3.1 Compliance with Local Regulations and State Law....20
Section 3.2 Major Subdivisions....20
Section 3.3 First Minor Subdivisions from a Tract of Record....27
Section 3.4 Subsequent Minor Subdivision....32
Section 3.5 Subdivisions Qualifying for Expedited Review....33
Section 3.6 Amended Plats....36
Section 3.7 Final Plat Submittal Requirements....37.1
Section 3.8 Flowchart of Subdivision Procedures....37.3

Chapter 4.0 DEVELOPMENT REQUIREMENTS....38

Section 4.1 General....38
Section 4.2 Conformance with Zoning....38
Section 4.3 Improvement Design....38
Section 4.4 Lots....38
Section 4.5 Blocks....39
Section 4.6 Streets and Roads....40
Section 4.7 Storm Drainage Facilities....56
Section 4.8 Sanitary Sewer Systems....57
Section 4.9 Water Supply Systems....58
Section 4.10 Solid Waste Disposal....58
Section 4.11 Utilities....59
Section 4.12 Watercourse and Irrigation Easements....59
Section 4.13 Disposition of Water Rights....61
Section 4.14 Fire Protection Requirements....61
Section 4.15 Noxious Weed Control....66
Section 4.16 Flood Hazard Evaluation....66

Chapter 5.0 GUARANTEE OF PUBLIC IMPROVEMENTS. 67
Section 5.1 Subdivision Improvement Agreement....67
Section 5.2 Security Guarantee....67
Section 5.3 Reduction of Guarantees....69
Section 5.4 Release of Guarantee....69

Chapter 6.0 SUBDIVISIONS FOR RENT OR LEASE. 70
Section 6.1 General....70
Section 6.2 Review Procedures....71
Section 6.3 Manufactured Home Park Development Requirements....71
Section 6.4 Recreational Vehicle Park Development Requirements....73
Section 6.5 Timing of Improvements....74

Chapter 7.0 CLUSTER DEVELOPMENTS AND PLANNED NEIGHBORHOOD DEVELOPMENTS....76
Section 7.1 Purpose....76
Section 7.2 Definitions....76
Section 7.3 Cluster Development General Requirements....76a
Section 7.4 Design Standards and Applications for Cluster Developments....76a
Section 7.5 Open Space....77
Section 7.6 Permitted Uses for Open Space....78
Section 7.7 Ownership and Management of Open Space....79
Section 7.8 Legal Instrument for Permanent Protection of Open Space....80
Section 7.9 Planned Neighborhood Developments General Requirements....80

Section 7.10 Design Standards and Applications for Planned Neighborhood Developments....81

Section 7.11 Examples of Cluster Development Designs.....82
Section 7.12 Examples of Planned Neighborhood Development Designs.....83

Chapter 8.0 CONDOMINIUMS AND TOWNHOMES.....84
Section 8.1 Condominium and Townhome or Townhouse Development…….....84
Section 8.2 Condominium and Townhome Standards.....84

Chapter 9.0 ENVIRONMENTAL ASSESSMENT.....85
Section 9.1 Purpose.....85
Section 9.2 General Requirements.....85
Section 9.3 Environmental Description Contents.....86
Section 9.4 Community Impact Report Contents.....88
Section 9.5 Summary of Probable Impacts.....93

Chapter 10.0 DEDICATION OF PARKS, TRAILS AND OPEN SPACE.....95
Section 10.1 Purpose.....95
Section 10.2 Park Land Dedication Requirements.....95
Section 10.3 School Land Dedication in Lieu of Park Land Dedication.....96
Section 10.4 Linear Park Land Dedication for Trail Corridors.....96
Section 10.5 Stormwater Detention/Retention Ponds in Parks.....96
Section 10.6 Determining Cash Contribution for Park Land.....97
Section 10.7 Use of Dedicated Money or Land for Parks.....97
Section 10.8 When Park Land Dedication May Not Be Required.....97
Section 10.9 Waiving Park Land Dedication Requirement.....98

Chapter 11.0 ADMINISTRATIVE PROVISIONS.....99
Section 11.1 Variances.....99
Section 11.2 Amendments to Subdivision Regulations.....100
Section 11.3 Corrections or Vacations of Recorded Final Plats and Supporting Documents.....100
Section 11.4 Corrections or Adjustments to Plats, Conditions and Supporting Documents after Preliminary Plat Approval.....101
Section 11.5 Appeals.....102
Section 11.6 Schedule of Fees.....103
Section 11.7 Penalty for Violation.....103

APPENDIX A Jurisdictional Map.....104
APPENDIX B Evasion Criteria.....105
APPENDIX C Preapplication Recommendations.....113
APPENDIX D Preliminary Plat Requirements.....115
APPENDIX E Preliminary Plat Application.....117
APPENDIX F Required Supporting Documents for Major Preliminary Plat Applications.....120
APPENDIX G Required Supporting Documents for First Minor Preliminary Plat

	Applications	123
APPENDIX H	Expedited Final Plat Application	126
APPENDIX I	Final Plat Application	128
APPENDIX J	Final Plat Requirements	131
APPENDIX K	Subdivision Improvements Agreement Template	135
APPENDIX L	Letter of Credit Template	145
APPENDIX M	Restrictions on Transfers and Conveyances Template	146
APPENDIX N	Flood Hazard Evaluation	149
APPENDIX O	Fee Schedule	153

A RESOLUTION AMENDING THE YELLOWSTONE COUNTY SUBDIVISION REGULATIONS OF 1975 AS AMENDED ESTABLISHING MINIMUM STANDARDS AND PROCEDURE AS REQUIRED BY LAW FOR PLATTING WITHIN YELLOWSTONE COUNTY

WHEREAS: The County Commissioners of Yellowstone County, Montana deem it necessary and as required by law in the interest of public health, safety, order, convenience and the general welfare to establish minimum standards and uniform procedures to be followed for the platting of land which will promote orderly growth and development, conservation, protection of health, safety, and general welfare.

BE IT RESOLVED BY THE YELLOWSTONE COUNTY COMMISSIONERS, YELLOWSTONE COUNTY, MONTANA:

Chapter 1: GENERAL PROVISIONS.

Section 1.1 Title.

These regulations will be known and may be cited as "The Subdivision Regulations of Yellowstone County" hereinafter referred to as "these Regulations".

Section 1.2 Authority.

Authorization for these regulations is contained in the Montana Subdivision and Platting Act (MSPA) (Title 76, Chapter 3, MCA). The reviewing authority is the City-County Planning Department.

Section 1.3 Purpose.

The purposes of these Regulations are to promote the public health, safety and general welfare of the citizens of Yellowstone County by regulating the subdivision of land and to promote a vision for the development of the lands within the County for the best possible environment in which to enjoy life, experience natural features, raise a family, earn a living, conduct business, obtain an adequate education, have access to health care facilities, and to be adequately protected from crime and disasters.

These Regulations are intended to comply with Part 5 of the MSPA, and are intended to provide for:

A. The orderly development of the jurisdictional area in accordance with adopted growth policies, neighborhood plans, motorized and non-motorized transportation plans, park plans, and other adopted policies and plans.

B. The public health, safety and general welfare of existing and future residents by avoiding danger or injury by reason of natural hazard or the lack of drainage, access, emergency services or other public services.

C. The coordination of roads within subdivided land with the existing and planned transportation network and avoid and minimize traffic congestion.

D. The dedication of land for roadways and for public utility easements.

E. Proper physical and legal road access, including obtaining of necessary easements and rights of way.

F. The promotion of adequate open spaces for travel, light, air, and recreation.

G. Adequate transportation, water, drainage, and sanitary facilities.

H. The consideration of impacts on natural resources and development in harmony with the natural environment.

I. The promotion of cluster development approaches that minimize costs to local citizens and that promote effective and efficient provision of public services.

J. The efficient expenditure of public funds for the supply of public services.

K. The standardization of making and filing of any plat for subdivided lands.

L. The protection of the rights of all documented property owners affected by the proposed subdivision including water, mineral, and air.

M. The administration of these regulations by defining the powers and duties of approving authorities including procedures for the review and approval of all plats of subdivisions covered by these provisions.

Section 1.4 Jurisdiction.
These Regulations govern the subdivision of land within the jurisdictional area of the Yellowstone County Board of Planning including the Town of Broadview, and the unincorporated areas of Yellowstone County. These Regulations do not cover the City of Billings, the City of Laurel, and the Laurel Planning Jurisdiction as shown on the map below or filed with the Yellowstone County Clerk and Recorder's Office.

Except when a plat is eligible for expedited review, if a proposed subdivision lies within three (3) miles of the City of Billings, the preliminary plat must be reviewed by the reviewing agency as to the effects on the City of Billings (76-3-601(2)(b), MCA). If a proposed subdivision lies partly within an incorporated city or town, the preliminary plat

must be submitted to, and approved by, both the City and the County governing bodies (76-3-601(2)(c), MCA).

These Regulations supplement all other regulations, and where they are at variance with other laws, regulations, ordinances, or resolutions, the more restrictive requirements apply.

Section 1.5 Exemptions for Certain Divisions of Land.

The Montana Subdivision and Platting Act provides that certain divisions of land, which would otherwise constitute subdivisions, are exempt from local subdivision review and approval, unless the method of disposition is adopted for the purpose of evading the requirements of Title 76, Chapter 3, Montana Code Annotated.

The procedures, criteria and requirements provided in Appendix B shall be used to review an exemption from subdivision review and to evaluate whether the division of land is for the purpose of evading the Montana Subdivision and Platting Act.

Section 1.6 Construction Timing.

The applicant or his/her contractors may not proceed with any construction work on a proposed subdivision, including grading and excavation relating to public improvements, until the governing body has given preliminary plat approval of the proposed subdivision plat. If improvements are initiated prior to final plat approval, the subdivider shall assume all risks and liability for error in improvement placement and the improvements must comply with the conditions and agreements of the preliminary plat approval.

Section 1.7 Transfers of Title.

Except as noted below, a final subdivision plat must be filed for record with the Yellowstone County Clerk and Recorder before title to the subdivided land can be sold or transferred in any manner. After the preliminary plat of a subdivision has been approved or conditionally approved, the subdivider may enter into contracts to sell lots in the proposed subdivision if all of the following conditions are met (76-3-303, MCA):

A. That under the terms of the contracts the purchasers of lots in the proposed subdivision makes all payments to an escrow agent, which must be a bank, savings and loan association, or title/escrow company chartered to do business in the State of Montana.

B. That under the terms of the contracts and the escrow agreement the payments made by purchasers of lots in the proposed subdivision may not be distributed by the escrow agent to the subdivider until the final plat of the subdivision is filed with the County Clerk and Recorder;

C. That the contracts and the escrow agreement provide that if the final plat of the proposed subdivision is not filed with the County Clerk and Recorder within two years of the preliminary plat approval, the escrow agent shall immediately refund to each purchaser any payments made under the contract;

D. That the County Treasurer has certified that no real property taxes assessed and levied on the land to be divided are delinquent; and

E. That the contracts contain the following language conspicuously set out therein: "The real property which is the subject hereof has not been finally platted, and until a final plat identifying the property has been filed with the County Clerk and Recorder, title to the property cannot be transferred in any manner."

Section 1.8 Suitability of Land.
If the Yellowstone County Board of Planning after review, finds any portion of a parcel of land proposed to be subdivided unsuitable for subdivision because of potential hazards such as flooding, land slides, steep slopes, rock falls, high water table, polluted or non-potable water supply, high voltage lines, high pressure gas lines, danger from fire or explosion or other features which may be detrimental to the health, safety, or general welfare of existing or future residents, they will not recommend approval of the subdivision unless the hazards are eliminated or overcome through approved design and construction plans.

Section 1.9 Permission to Enter.
The governing body or its designated agent(s) or agency may investigate, examine, and evaluate the site of the proposed subdivision to verify information provided by the subdivider. The submission of a preliminary plat or final plat application constitutes a grant of permission by the subdivider to enter the subject property.

Section 1.10 Severability.
If a court of competent jurisdiction holds any word, phrase, clause, sentence, paragraph, section, or other part of these Regulations invalid, that judgment will affect only the part held invalid.

Section 1.11 Regulations in Effect.
Review and approval or disapproval of a subdivision under these Regulations may occur only under those regulations in effect at the time an application for approval of a preliminary plat or an extension of preliminary plat approval is submitted to the governing body.

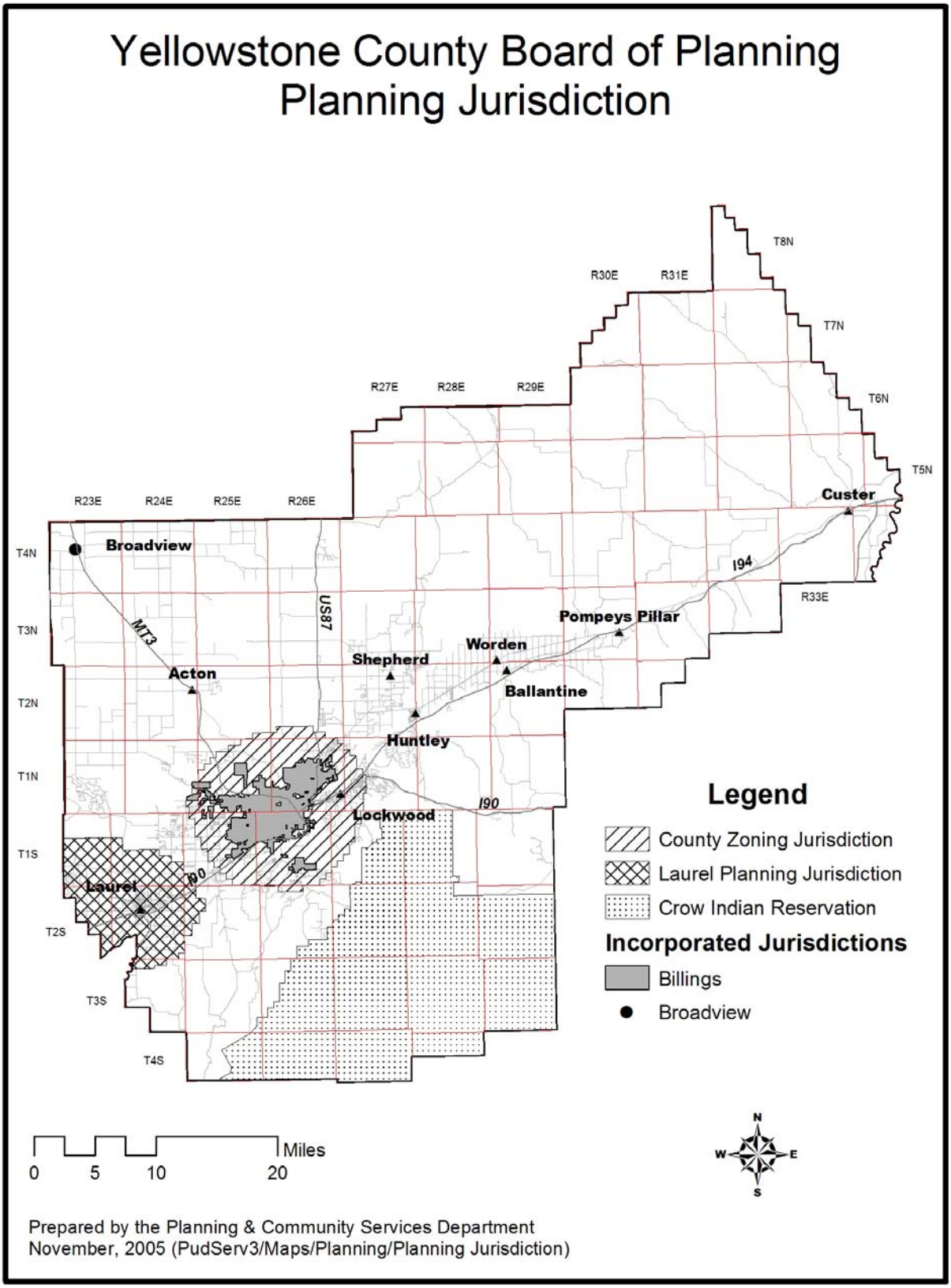
Yellowstone County Board of Planning
Planning Jurisdiction
T8N
T7N
T6N
T5N
T4N
T3N
T2N
T1N
T1S
T2S
T3S
T4S
R23E
R24E
R25E
R26E
R27E
R28E
R29E
R30E
R31E
R33E
Broadview
Custer
Pompeys Pillar
Worden
Shepherd
Acton
Ballantine
Huntley
Lockwood
Laurel
MT3
US87
I94
I90
Legend
County Zoning Jurisdiction
Laurel Planning Jurisdiction
Crow Indian Reservation
Incorporated Jurisdictions
Billings
Broadview
0
5
10
20
Miles
N
W
E
S
Prepared by the Planning & Community Services Department
November, 2005 (PudServ3/Maps/Planning/Planning Jurisdiction)

Chapter 2.0 DEFINITIONS.

Whenever the following words or phrases appear in these Regulations they shall have the meaning assigned to them by this Section. The word "shall" is always mandatory, and the word "may" indicates use of discretion in making decisions.

ACCESS:

A. LEGAL ACCESS: When the subdivision abuts a public street or road under the jurisdiction of the City, the County, or the State, or when the subdivider has obtained documented adequate and appropriate written easements from a public road to the subdivision across all intervening properties.

B. PHYSICAL ACCESS: When a road or driveway conforming to City and/or County standards provides vehicular access from a public or private road to the subdivision.

ADJOINING PROPERTY OWNERS: Persons who are owners of record of properties adjoining the land being proposed for subdivision platting.

AGRICULTURE: Montana Code Annotated contains definitions for the words "agriculture" and "agricultural" as follows:

> 41-2-103, MCA. Definitions. As used in this part, the following definitions apply: (1) "Agriculture" means: (a) all aspects of farming, including the cultivation and tillage of the soil; (b)(i) dairying; and (ii) the production, cultivation, growing, and harvesting of any agricultural or horticultural commodities, including commodities defined as agricultural commodities in the federal Agricultural Marketing Act [12 U.S.C. 1141j(g)]; (c) the raising of livestock, bees, fur-bearing animals, or poultry; and (d) any practices, including forestry or lumbering operations, performed by a farmer or on a farm as an incident to or in conjunction with farming operations, including preparation for market or delivery to storage, to market, or to carriers for transportation to market.
>
> 81-8-701, MCA. Definitions. The following definitions apply: (1) "Agricultural and food product" includes a horticultural, viticultural, dairy, livestock, poultry, bee, other farm or garden product, fish or fishery product, and other foods.

AGRICULTURAL WATER USER FACILITIES: Those facilities which convey water for agricultural land as defined in 15-7-202, MCA, or which provide water for the production of agricultural products as defined in 15-1-101, MCA, including, but not limited to, ditches, drains, pipes, and head gates.

AGRICULTURAL WATER USER: Persons and lands legally entitled to water under an appropriated water right or permit of an irrigation district or other private or public entity formed to provide for the use of the water right on subdivision lots.

APPLICANT: The owner of land proposed for subdivision or the owner's legally designated

representative for the purposes of submitting a request to subdivide (See SUBDIVIDER).

BIKEWAY: A generic term for any road, street, path, or way, which is specifically designated for bicycle travel, regardless of whether such facilities are designated for the exclusive use of bicycles or are to be shared with other transportation modes.

BLOCK: A group of lots, tracts or parcels within well-defined and fixed boundaries. Such boundaries may include streets, railroads, irrigation ditches, streams, platted lands, or a combination thereof.

BOARD OF COUNTY COMMISSIONERS: The governing body for Yellowstone County, Montana.

BOULEVARD: An area of public right-of-way or private easement between the traveled edge of the street or road and the private property line. The boulevard provides for the opportunity to separate vehicle traffic from pedestrian travel. Boulevards often have sidewalks and mailboxes located in them and often are landscaped. A parkway median is a landscaped area located in the middle of the street or road.

CERTIFICATE OF SURVEY: A drawing of a field survey prepared by a registered surveyor for the purpose of disclosing facts pertaining to boundary locations.

CHECKPRINT: A paper copy of the final plat submitted by the subdivider for review for compliance with the Administrative Rules of Montana and conditions of approval by staff prior to submitting the final plat on mylar.

CITY COUNCIL: The governing body for the City of Billings, Montana, or any other municipality within Yellowstone County.

CLUSTER DEVELOPMENT: A subdivision of land with lots clustered in a group of five or more lots that is designed to concentrate building sites on smaller lots in order to reduce capital and maintenance costs for infrastructure through the use of concentrated public services and utilities, while allowing other lands to remain undeveloped (76-3-103(2), MCA).

CONDOMINIUM: The ownership of single units with common elements location of property submitted to the provisions of 70-23-101, et. seq., MCA. The term does not include townhome or townhouse.

CONSERVATION SUBDIVISION: A development in a rural setting that is characterized by compact lots and common open space, and where the natural features of land are maintained to the greatest extent possible.

COVENANT (DEED RESTRICTION): A limitation contained in a deed that restricts or regulates the use of the real property, not enforced by the governing body.

DEDICATION: The deliberate appropriation of land by an owner for any general and public use, reserving to the landowner no rights that are incompatible with the full exercise and enjoyment of the public use to which the property has been devoted (76-3-103(3), MCA).

DIVISION OF LAND: The segregation of one or more parcels of land from a larger tract held in single or undivided ownership by transferring or contracting to transfer title to a portion of the tract or properly filing a certificate of survey or subdivision plat establishing the identity of the segregated parcels pursuant to the Montana Subdivision and Platting Act. The conveyance of a tract of record or an entire parcel of land that was created by a previous division of land is not a division of land (76-3-103(4), MCA).

DRIVEWAY: A vehicular access serving no more than 2 lots or 5 dwelling units.

DWELLING UNIT: Any building or portion thereof providing complete, independent and permanent living facilities for one family. A family is any number of individuals, related by blood, marriage, adoption or other legal means, including any number of minor children in foster care, and/or any number of unrelated persons (including any domestic servants or caregivers) living together in a dwelling unit (24 CFR Part 4, Section 982.401).

EASEMENT: Authorization by a property owner for another to use the property for a specified purpose, in which the owner agrees not to build, or otherwise obstruct or interfere with the specified purpose.

ENGINEER (REGISTERED PROFESSIONAL ENGINEER): A person licensed in conformance with the Montana Professional Engineers' Registration Act (67-37, MCA) to practice engineering in the State of Montana.

FLOOD: When water from any watercourse or drainage rises above the bank or moves outside the channel of that watercourse or drainage (76-5-103, MCA).

100-YEAR FLOOD: A flood magnitude expected to recur on the average of once every 100 years, or a flood magnitude which has a 1% chance of occurring in any given year (76-5-103, MCA).

FLOODPLAIN: The area adjoining the watercourse or drainage that would be covered by the floodwater of a flood of 100-year frequency (76-5-103, MCA).

FLOODWAY: The channel of a watercourse or drainage and those portions of the floodplain adjoining the channel that are reasonably required to carry and discharge the floodwater of any watercourse or drainage (76-5-103, MCA).

GOVERNING BODY: The Board of County Commissioners of Yellowstone County, Montana.

GREENBELT/GREENWAY: Corridors of protected open space managed for conservation and recreation purposes as designated by the governing body. They often follow natural land or water features and link nature reserves, parks, cultural features and historic sites with each other and with populated areas. These corridors may be privately or publicly owned.

GROWTH POLICY: The Yellowstone County and City of Billings Growth Policy and any version of this policy adopted by the Billings City Council and Board of County Commissioners (76-1-601, MCA), used as a guiding document for evaluating land use decisions.

LOCAL SERVICES: Any and all services or facilities that local government entities are authorized to provide.

LOT: A parcel, plot, or other land area created by subdivision or certificate of survey for sale, rent, or lease.

LOT MEASUREMENTS:

a. Lot Depth -- The length of a line drawn perpendicularly to the front lot line and extending to the rear lot line.
b. Lot Width -- The average width of the lot.
c. Lot Frontage -- The width of the lot line that fronts a public street right-of-way or public road easement where the lot usually has a driveway access.
d. Lot Area -- The area of a lot determined exclusive of street, highway, alley, road, or other rights-of-way.

LOT TYPES:

a. Corner Lot: A lot located at the intersection of two streets.
b. Interior Lot: A lot with frontage on only one street.
c. Through or Double-Frontage Lot: A lot whose front and rear lines both abut on streets.
d. Flag Lot
e. Irregular Lot

Figure 2.1 Lot Types

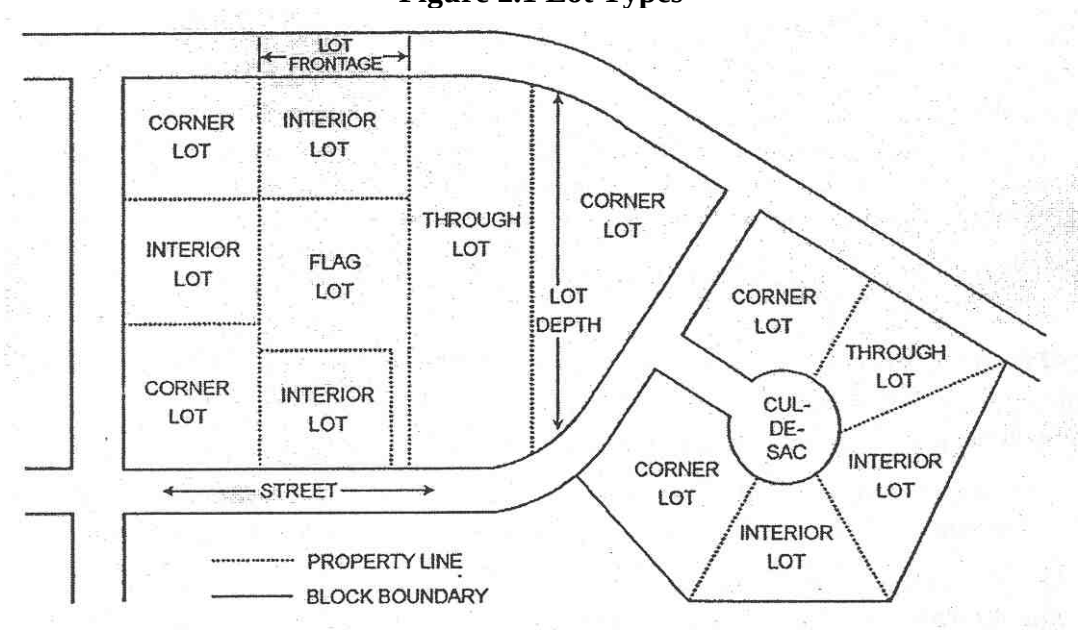

MANUFACTURED HOME: A detached residential dwelling unit, which may consist of two or more sections, fabricated at a factory and designed to be towed on its own chassis to a building site for occupation as a dwelling with or without a permanent foundation. The term includes, but is not limited to, "trailer homes," "house trailers," and "mobile homes" whether or not the unit has been constructed after June 15, 1976, in conformance with Federal Manufactured Home Construction and Safety Standards. The term does not include "modular" or "factory-built buildings" that are fabricated at a factory in accordance with the International Residential/Building Code applicable to site-built homes, and are transported to the site for final assembly on a permanent foundation.

MANUFACTURED HOME SPACE: A designated portion of a parcel of land designed for the accommodation of one manufactured home and its accessory buildings or structures for the exclusive use of the occupants.

MANUFACTURED HOME PARK: A single parcel of land or a lot that is designed or used for temporary or permanent spaces for 2 or more manufactured homes where either the space for a manufactured home or a manufactured home itself is available to the general public for residential use.

MANUFACTURED HOME PAD: That area of a manufactured home space that has been prepared for the placement of a manufactured home.

MASTER PLAN (Overall Plan; Sequential Development**):** The plan of a subdivision designed for a single tract and proposed to be subdivided in various stages, phases or configurations.

MEDIAN: A raised divider made of dirt, concrete or other material located in the middle of a street

or road between travel lanes that is often landscaped (See BOULEVARD).

MOBILE HOME OR TRAILER: See MANUFACTURED HOME.

MODULAR HOME: A dwelling unit constructed in accordance with the standards set forth in the International Residential/Building Code and bearing the insignia of the State of Montana, applicable to site-built homes, and composed of components assembled in a manufacturing plant and transported to the building site for final assembly on a permanent foundation.

MONTANA DEPARTMENT OF ENVIRONMENTAL QUALITY MINIMUM STANDARDS: Minimum standards promulgated by the Montana Department of Environmental Quality, pursuant to Title 76, Chapter 4, Part 1, MCA.

MONUMENT (PERMANENT MONUMENT): Any structure of masonry, metal, or other permanent, durable material placed in the ground, which is exclusively identifiable as a monument to a survey point, expressly placed for surveying reference.

MULTI-USE PATH: A hard or soft-surfaced trail physically separated from motorized vehicular traffic by an open space or barrier and either within the public right-of-way or within an independent right-of-way. Shared use paths may also be used by pedestrians, in-line skaters, wheelchair users, joggers and other non-motorized users.

NATURAL ENVIRONMENT: The physical conditions that exist within a given area, including land, air, water, mineral, plants, animals, and objects of aesthetic significance.

NO ACCESS EASEMENT: A line designated on a subdivision plat for the purpose of restricting vehicular access from a public right-of-way to a lot.

OPEN SPACE: Any land which is provided or preserved for park or recreational purposes as designated by the governing body; conservation of land or other natural resources; historic or scenic purposes; or assisting in the shaping of the character, direction, and timing of community development.

PLANNED NEIGHBORHOOD DEVELOPMENT (PND): A land development project consisting of a planned mixture of land uses such as residential clusters, industrial parks, shopping centers, and/or office building parks built in a prearranged relationship to each other and having open space and community facilities in common ownership or use (76-3-103(10), MCA).

PLANNING BOARD: The Yellowstone County Board of Planning.

PLANNING DIRECTOR: The Director of the Planning and Community Services Department or an authorized reviewing authority.

PLAT: A graphical representation of a subdivision showing the division of land into lots, parcels, blocks, streets, and alleys and other divisions and dedications.

a. Preliminary Plat: A neat and scaled drawing of a proposed subdivision showing the layout of streets, alleys, lots, blocks, and other elements of a subdivision which furnish a basis for review by a governing body (76-3-103(12), MCA).

b. Final Plat: The final drawing of the subdivision and dedication required to be prepared for filing for record with the County Clerk and Recorder containing all elements and requirements set forth in these Regulations and the Montana Subdivision Act (76-3-103(6), MCA).

c. Amended Plat: The final drawing of any change to a filed platted subdivision.

d. Exempt Plat: A survey or plat that is exempt from local subdivision review and approval under the provisions of the MSPA and as described in Appendix B of these Regulations.

PROFESSIONAL ENGINEER: See ENGINEER

PUBLIC HEALTH AND SAFETY: A condition of optimal well being, free from danger, risk, or injury for a community at large, a small class of persons or a specific individual.

PUBLIC IMPROVEMENT: Any structure or facility constructed to serve the residents of a subdivision or the general public.

PUBLIC ROAD OR STREET: A road or street that has been dedicated and accepted for public use or an easement that has been granted and accepted for public use.

RECREATIONAL CAMPING VEHICLE: A vehicle primarily designed as temporary living quarters for recreational, camping, or travel use that either has its own motor power or is mounted on or drawn by another vehicle.

RECREATIONAL VEHICLE PARK: Any area or tract of land designed or used that contains two (2) or more spaces which are available for rent or lease to the general public for parking or placement of temporary recreational vehicles. This term does not include a parcel composed of individually platted lots.

RECREATIONAL VEHICLE SPACE: A designated portion of a recreational vehicle park designed for the placement of a single recreational vehicle and the exclusive use of its occupants.

REVIEWING AUTHORITY: City-County Planning Department.

STATE: The State of Montana.

STREET TYPES: For purposes of these Regulations, street types are defined using the Institute of Transportation Engineers Manual as follows:

a. Alley: Minor rights-of-way used primarily for vehicular access to the back or side of properties that abut on and are otherwise served by public roads.

b. Arterial: Any major carrier of traffic which generally terminates at both ends at a location that will produce more than 2,000 vehicles per day traffic, or upon which the nature of the traffic is such that more than 60% of the vehicles are using the street for mobility rather than land access. Typically they are no more than 1 mile apart.

    1. Principal Arterial: A street which serves the major centers of a metropolitan area, the highest traffic volume corridors, and the longest trip desires, and which carries a high proportion of the total urban area travel on a minimum of mileage.

    2. Minor Arterial: A street that interconnects with and augments the principal arterials, provides service to trips of moderate length at a lower level of travel mobility than principal arterials, and distributes travel to geographic areas smaller than those identified as principal arterials.

c. Collector: A street that generally terminates at both ends at an arterial or collector but because of location, curvilinear design, or limited feeder area will not generally serve more than 2,000 vehicles per day, or the nature of the traffic is such that approximately 50% of the traffic is using the street for land access and 50% for mobility. Typically they are located between arterial streets at no more than one-half (½) mile from an arterial street.

d. Cul-de-sac: A street having only one outlet for vehicular traffic and terminating in a turn-around area.

e. Frontage Access (Service Road): A local or collector street, usually parallel and adjacent to an arterial or major collector, which provides access to abutting properties and controls traffic access to arterials or collectors.

f. Half-Street: A portion of the width of a street, usually located along the perimeter of a subdivision, the remaining portion of which street must be located on adjacent property if the street is to be fully constructed.

g. Local Streets: A street or road having the primary function of serving abutting properties, and the secondary function of moving traffic.

h. Loop: A local street which begins and ends on the same street, generally used for access to properties.

SUBDIVIDER: Any person, or entity that owns or buys land, divides it into usable lots and develops or rents the lots, or sells the lots to others for development.

SUBDIVISION: A division of land or land so divided which creates one or more parcels containing less than 160 acres that cannot be described as a one-quarter aliquot part of a United States government section, exclusive of public roadways, in order that the title to the parcels may be sold or otherwise transferred and includes any re-subdivision and a condominium or townhome created in accordance with the Unit Ownership Act (70-23-101, et seq., MCA). The term also means an area, regardless of its size, that provides or will provide multiple spaces for rent or lease on which recreational camping vehicles or mobile homes will be placed (76-3-103(15), MCA). However, condominiums or townhomes constructed on land divided in compliance with the Montana Subdivision and Platting Act are exempt from the provisions of the Act (76-3-203, MCA).

SUBDIVISION, MAJOR: A subdivision that does not qualify for review as a minor subdivision.

SUBDIVISION, FIRST MINOR: A subdivision of a parcel that has never been subdivided or created by a subdivision, or has not resulted from a tract of record that has had more than five parcels created from that tract of record under 76-3-201 or 76-3-207, MCA since July 1, 1973 (76-3-609(2), MCA). Furthermore the first minor subdivision contains five or fewer lots, and legal and physical access to all lots is provided.

SUBDIVISION, SUBSEQUENT MINOR: Divisions of land creating five (5) or fewer lots that are not first minor subdivisions from a tract of record.

SUBDIVISION QUALIFYING FOR EXPEDITED REVIEW: An abbreviated review and approval process for subdivision plats containing one or two parcels when proper access to all lots is provided, when no land in the subdivision will be dedicated to public use for parks or playgrounds, and when the plats have been approved by the Department of Environmental Quality whenever approval is required.

SURVEYOR (REGISTERED LAND SURVEYOR): A person licensed in conformance with the Montana Professional Engineer's Registration Act (Title 37, Chapter 67, MCA) to practice surveying in the State of Montana.

SURVEYOR (EXAMINING LAND SURVEYOR): A registered land surveyor duly appointed by Yellowstone County to review surveys and plats submitted for filing.

SWALE: A drainage channel or depression designed to direct surface water flow.

TOWNHOME/TOWNHOUSE: Property that is owned subject to an arrangement under which persons own their own units and hold separate title to the land beneath their units, but under which they may jointly own the common areas and facilities (70-23-102(14), MCA).

TRACT OF RECORD: An individual parcel of land, irrespective of ownership, that can be identified by legal description, independent of any other parcel of land, using documents on file in the records of the County Clerk and Recorder's office (76-3-103(16)(a), MCA).

TRAFFIC CONTROL DEVICES: All signs, signals, markings, and other devices used to

regulate, warn, or guide traffic, placed on, over, or adjacent to a street, highway, pedestrian facility, or multi-use trail by authority of a public agency having jurisdiction in conformance with the *Manual of Uniform Traffic Control Devices*.

TRANSPORTATION PLAN: Billings Urban Area Transportation Plan2009 Update, or any newer transportation planning document adopted by Policy Coordinating Committee (Metropolitan Planning Organization) for the Billings urban area.

UTILITY: A service to the public including, but not limited to, sanitary and storm sewers, water, electric power, gas, telephone, cable television, and other communication means.

VICINITY SKETCH: A map included with a site plan or placed on a plat that enables the viewer to clearly determine the location of a proposed subdivision in the City or County.

WILDLAND-URBAN INTERFACE: Areas where wildland vegetation meets urban developments, or where forest fuels meet urban fuels (such as homes). These areas encompass not only the interface (areas immediately adjacent to urban development) but also the continuous slopes and fuels that lead directly to a risk to urban developments, and are generally mapped in the Yellowstone County WUI Community Wildfire Protection Plan.

WILDLIFE: Non-domesticated animals.

WILDLIFE HABITAT: A place frequented by wildlife or a site where wildlife live.

Chapter 3.0 SUBDIVISION REVIEW PROCEDURES.

Section 3.1 Compliance with Local Regulations and State Law.

No subdivision of any lot, tract, or parcel of land shall be undertaken; no street, sanitary sewer, storm sewer, water main, or other facilities in connection therewith shall be constructed, opened or extended for public use and travel, or for common use of occupants of buildings except in strict accordance with the provisions of these Regulations and related State statutes.

Section 3.2 Major Subdivisions.

Divisions of land creating of six (6) or more parcels must be reviewed as a major subdivision. The major subdivision shall be reviewed by the governing body of the jurisdiction where the subdivision is located. If the subdivision is within three (3) miles of the City of Billings, the preliminary plat must be reviewed by the reviewing agency as to the effects on the City of Billings (76-3-601(2)(b), MCA) A copy of the application shall also be provided to school district trustees (76-3-601 (2)(b), MCA).

If the proposed subdivision lies partly within an incorporated city or town, the proposed plat must be submitted to and approved by both the city or town and county governing body (76-3-601 (2)(c), MCA).

A. **Preapplication Meeting (76-3-504(1)(q), MCA).** The purpose of the preapplication meeting is to provide the subdivider with requirements of local subdivision regulations and the Montana Subdivision and Platting Act and to provide non-binding recommendations of design alternatives. A preapplication meeting must be requested no later than twenty (20) working days and no earlier than one hundred and twenty (120) working days prior to submittal of a major preliminary plat application for completeness review.

   At the time of request, the subdivider shall provide the Planning Director or designee with ten (10) sketch plans of the proposed subdivision for review and discussion. The sketch plan should be legibly drawn to scale no greater than 1 inch = 400 feet (1:4,800), showing in simple form the layout of proposed features in relation to existing conditions. The sketch plan may be a freehand sketch made directly on a print of a topographic map. See Appendix C for recommended preapplication sketch plan contents and other meeting recommendations.

   The Planning Director or designee will schedule the preapplication meeting to occur within fifteen (15) working days of the receipt of the sketch plan, and shall notify the subdivider and any affected County Departments of the time and place of the meeting.

   The preapplication meeting shall not constitute approval of a preliminary or final plat. Rather, it shall be deemed an expression of general acceptance of the sketch plan submitted and an opportunity to offer other layout options.

B. **Preapplication Completeness Review. (76-3-604(1)(a), MCA).** One (1) month prior to submittal deadline for major preliminary plat applications, the subdivider shall submit one (1) copy of the application including the preliminary plat and supporting documents to the Planning Director or designee for review. After receipt of the copy the Planning Director or designee shall notify the subdivider within five (5) working days as to the completeness of the application. A complete application will include all those items listed in Appendix D "Preliminary Plat Requirements", where applicable, and any additional information identified at the preapplication meeting. If the Planning Director or designee determines the application is complete, the subdivider may submit the application, plat and supporting documentation for sufficiency review. If the Planning Director or designee determines the application is incomplete, the subdivider must correct the deficiencies and resubmit the application.

C. **Preapplication Sufficiency Review. (76-3-604(2)(a), MCA).** Within fifteen (15) working days after notifying the applicant that the application is complete, the Planning Director or designee will determine that the information in the application is sufficient to allow for review of the proposed subdivision. If the Planning Director or designee determines the information is sufficient, the applicant will be notified that the complete and sufficient application may be submitted at the application submittal deadline. If the Planning Director or designee determines the information is insufficient, the subdivider must correct the deficiencies prior to the next submittal deadline or postpone submittal to a future submittal deadline.

D. **Major Preliminary Plat Application Submittal.**

1. **Required**. The subdivider shall submit to the Planning Director or designee, for review and recommendation, a preliminary plat of the proposed major subdivision which conforms to the requirements of these Regulations.

   Any information required in submittal of plats and supporting documents relating to the practice of land surveying shall be performed by a land surveyor licensed to practice in the State of Montana.

   Any information required in submittal of plats and supporting documents relating to the practice of engineering shall be performed by a professional engineer, competent in civil engineering, licensed to practice in the State of Montana.

2. **Application submittal**. Complete and sufficient application for major preliminary plat approval shall be made to the Planning Director or designee on or before 3:00 p.m. of the first day of any given month. When the date of submittal falls on a weekend or holiday, the submittal shall be on the following working day by 3:00 p.m. The application form is provided in Appendix E "Preliminary Plat Application" and must be accompanied by the required preliminary plat, supporting documents, and applicable fee.

3. **Review period.** Upon receipt of a complete and sufficient application, the governing body has sixty (60) working days to approve, conditionally approve, or deny the preliminary plat application. For subdivisions containing fifty (50) or more lots the review period is eighty (80) working days. The review period may be extended upon written consent from the subdivider (76-3-604(4), MCA).

E. **Preliminary Plat Contents and Submittal Copies.**

1. **Content.** The preliminary plat shall clearly show the information listed in Appendix D "Preliminary Plat Requirements.

2. **Copies.** The subdivider shall provide the number of copies of the preliminary plat as determined by the Planning Director or designee. All plats shall be 24 inch by 36 inch size and/or 11 inch by 17 inch size as specified by the Planning Director or designee. Electronic copies of the plat shall be provided as follows; One (1) copy in .pdf, .jpg or .tif format is required, and one (1) copy in either .dwg or .dxf format is requested.

F. **Supporting Documentation.**

1. **Required documents.** The supporting information shall include those documents listed in Appendix F "Required Supporting Documents for Major Preliminary Plat Applications."

2. **Required copies.** The subdivider shall provide the number of copies of the supporting documents as determined by the Planning Director or designee. All documents shall be typed and in a format specified by the Planning Director or designee.

G. **Staff and Agency Review.**

1. **Review procedure schedule.** Upon receipt of a complete and sufficient major preliminary plat application, the Planning Director or designee shall develop a schedule for the review period. The schedule shall include the dates, times and location of all key meetings, hearings and actions, and the dates of all key deadlines.

2. **Submittal distribution.** Planning staff shall distribute the application to all affected County Departments, local, state, and federal agencies, school districts and public utilities for review, and include a copy of the review procedure schedule. These affected entities shall determine what effect the proposed subdivision may have on their ability to provide services and submit recommendations for mitigation of those impacts. The affected entities shall respond to the Planning staff within approximately ten (10) working days. A public utility or agency review may not delay the governing body's action on the plan beyond the 60 or 80-working day

review period. Failure of any agency to complete a review of a plat will not be the basis for denial of the plat by the governing body (76-3-504(1)(i), MCA).

3. **Department plat review meeting.** Planning staff shall arrange a department plat review meeting to publicly review comments from the affected entities and inform the subdivider of revisions or additions required to bring the application into compliance with local regulations and state law. The subdivider and their representative are required to attend the department plat review meeting and shall be given a copy of all comments received to date from the affected entities.

4. **Application resubmittal.** The Planning staff shall notify the subdivider, in writing, of the resubmittal requirements within one (1) working day of the department plat review meeting. The subdivider shall revise the plat and supporting documents as required and submit the number of copies of the revised application and documents as determined by the Planning Director or designee within five (5) working days of receipt of the resubmittal notice.

5. **Final staff comments.** Affected departments shall provide the Planning staff with final written comments regarding the resubmitted documents within five (5) working days of receipt of resubmittal.

6. **Hearing notice.** The Planning Board shall hold a public hearing on all major preliminary plat applications. Planning staff shall place a notice in a newspaper of general circulation in the County not less than fifteen (15) days prior to the date of a public hearing. The Planning staff shall also notify the subdivider and each property owner of record, and each purchaser under contract for deed of property immediately adjoining land included in the plat by certified mail not less than fifteen (15) days prior to the date of hearing (76-3-605(3), MCA).

7. **Staff report.** Planning staff shall prepare staff reports and presentations for the Planning Board plat review meeting and public hearing. A copy of each staff report shall be provided to the subdivider at least five (5) working days prior to the Board or governing body meeting. Each staff report shall provide a recommendation for approval, conditional approval or denial of the application and draft findings of fact as basis for the recommendation. The Planning staff shall also prepare a report forwarding the recommendation of the Planning Board to the governing body including the Board's recommendation for approval, conditional approval or denial of the application and draft findings of fact as basis for the recommendation.

H. **Planning Board Plat Review.** The Planning Board, as the authorized agent of the governing body shall conduct a plat review of the major preliminary plat application at a regularly scheduled meeting prior to the scheduled public hearing. The purpose of the plat review meeting is to consider the following relevant review criteria:

1. The environmental assessment and all criteria discussed therein, unless the plat is exempted from the requirement of submitting an environmental assessment pursuant to MCA 76-3-616;

2. The effect on agriculture, agricultural water user facilities, local services, the natural environment, wildlife, wildlife habitat, and public health and safety (76-3-608(3)(a), MCA);

3. Compliance with:

   a. The Montana Subdivisions and Platting Act (76-3-101 et seq., MCA) (76-3-608 (3)(b), MCA); and

   b. The provision of easements for the location and installation of any planned utilities (76-3-608 (3)(c), MCA); and

   c. The provision of legal and physical access to each parcel within the subdivision (76-3-608 (3)(d), MCA); and

   d. The required notation of that access on the applicable plat and any instrument of transfer concerning the parcel (76-3-608 (3)(d), MCA); and

   e. Local zoning requirements; and,

4. Consistency with the adopted Growth Policy, Transportation Plan, and the Heritage Trail Plan[1].

5. **Determination.** The Planning Board shall determine if there are any significant adverse impacts the subdivision may have based on its review of this information and formulate recommended conditions to reasonably minimize those impacts.

   In reviewing a subdivision and when requiring mitigation, the Planning Board may not unreasonably restrict a landowner's ability to develop land, but it is recognized that in some instances the unmitigated impacts of a proposed development may be unacceptable and will preclude recommendation of approval of the plat (76-3-608(5)(a), MCA).

I. **Public Hearing.** The Planning Board shall conduct the public hearing and consider all relevant evidence as related to the proposed plat before preparing its written findings of fact and recommendation to the Board of County Commissioners. The subdivider or their agent shall be given the opportunity to object to any testimony given. The subdivider shall be allowed to submit in writing his or her own proposed findings of fact to the Board and the governing body following the hearing.

The relevant evidence considered at the public hearing on the preliminary plat shall

[1] A governing body may not withhold, deny, or impose conditions on any land use approval or other authority to act based solely on compliance with a growth policy (76-1-605(2)(b), MCA).

include the criteria listed above in Section H. of this Chapter.

After holding the public hearing and reviewing the evidence concerning the plat, the Planning Board shall submit its recommendations to the Board of County Commissioners to approve, conditionally approve or deny the major preliminary plat in writing no later than ten (10) days after the public hearing (76-3-605(4), MCA).

J. **Subsequent Hearing** (76-3-615, MCA)**.** Before acting on the subdivision application, the governing body shall determine whether public comments or documents presented at the Planning Board public hearing constitute:

1. Information that the public has not had a reasonable opportunity to examine and comment, or

2. New information never submitted or considered by the Planning Board or staff.

If the governing body determines that public comments or documents meets at least one (1) of the criteria listed above, it may act on the subdivision application in accordance with this Chapter or schedule a subsequent public hearing for consideration of only the new information that may have an impact on the findings and conclusions that the governing body will rely upon in making its decision on the proposed subdivision. The governing body may chose to hold the subsequent public hearing or may direct the Planning Board to hold it. In either case, the subsequent public hearing shall be held at the next scheduled meeting for which proper notice for the public hearing on the subdivision application can be provided.

If a subsequent hearing is held, the sixty (60) or eighty (80) working day review period is suspended and the new hearing must be noticed and held within forty-five (45) days of the governing body's determination to hold a subsequent public hearing. The sixty (60) or eighty (80) working day review period will resume from the date of the subsequent public hearing. The governing body may not consider any information that is presented after the subsequent hearing.

K. **Subdivider's Preference for Mitigation.** No later than ten (10) days before the meeting when the governing body is to consider the Planning Board's recommendation on the preliminary plat, the subdivider may submit in writing to the governing body comments on and responses to the Planning Board's recommendations. This document may include the subdivider's alternative proposals, if any, for mitigating the impacts identified in the Planning Board's recommendations. The governing body shall give due weight and consideration to the subdivider's expressed preferences (76-3-608(5)(b), MCA).

L. **Governing Body Action.** The governing body's decision to approve, conditionally approve, or deny a subdivision is based on the preliminary plat, applicable environmental

assessment, public hearing, Planning Board recommendations, or additional information that demonstrates the development of the subdivision meets the requirements of the Montana Subdivision and Platting Act and these regulations. A governing body may not deny approval of a subdivision based solely on the subdivision's impacts on educational services, or based solely on parcels within the subdivision having been designated as wildland-urban interface parcels under 76-13-145, MCA (76-3-608(1), MCA), or solely on compliance with a Growth Policy (76-1-605(2)(b), MCA).

The governing body shall issue written findings of fact that weigh the criteria as listed in Section 3.2.H. of this Chapter. The governing body shall determine if there are any significant adverse impacts the subdivision may have based on its review of this information and formulate conditions to reasonably minimize those impacts (76-3-608(4), MCA).

In reviewing a subdivision and when requiring mitigation, the governing body may not unreasonably restrict a landowner's ability to develop land, but it is recognized that in some instances the unmitigated impacts of a proposed development may be unacceptable and will preclude approval of the plat (76-3-608(5)(a), MCA).

The County Commissioners shall approve, conditionally approve or reject the preliminary plat within sixty (60) or eighty (80) working days of the submittal deadline and when the application was considered complete and sufficient.

The governing body shall send the subdivider a letter within thirty (30) working days of its decision stating the reasons for the denial or enumerating the conditions which must be met to assure approval of the final plat along with written findings of fact (76-3-608(4), MCA).

M. **Preliminary Plat Approval Period** (76-3-610(1), MCA)**.** The approval or conditional approval shall be valid for not more than three (3) calendar years. At the end of this period the County Commissioners may, at the request of the subdivider, extend its approval for a mutually agreed-upon period of time. Any mutually agreed-upon extension must be in writing and dated and signed by the governing body and the subdivider or subdivider's agent. The governing body may issue more than one extension.

When considering a request for an extension of the preliminary plat approval period, the governing body may use the following criteria to evaluate the request:

1. Changes to the subdivision regulations since the original approval and whether the subdivision as originally approved is essentially compliant with the new regulations;

2. Progress to date in completing the subdivision as a whole and any phases;

3. Phasing of the subdivision and the ability for the existing development to operate

without the delayed development;

4. Dependence of infrastructure development on the subdivision;

5. Duration of the requested extension;

6. Demonstrated ability of the subdivider to complete the subdivision;

7. Such other factors or criteria as deemed material in the discretion of the governing body.

After the preliminary plat is approved, the governing body may not impose any additional conditions as a prerequisite to final plat approval, providing the approval is obtained within the original or extended approval period described above (76-3-610(2), MCA).

N. **Appeal Process.** A decision of the governing body regarding a proposed subdivision may be appealed to the district court, as provided in Section 11.5 of these Regulations and 76-3-625, MCA.

O. **Final Plat.** A final plat application shall be submitted for review and approval following the procedures outlined in Section 3.7 of this Chapter prior to the expiration of the preliminary plat approval period.

Section 3.3 First Minor Subdivision from a Tract of Record.

Divisions of land creating five (5) or fewer lots from a tract of record that has not been subdivided or created by a subdivision under the Montana Subdivision and Platting Act or has not resulted from a tract of record that has had more than five parcels created from that tract of record under 76-3-201 or 76-3-207, MCA since July 1, 1973 shall be reviewed as first minor subdivisions from a tract of record, hereafter referred to as a "first minor" (76-3-609(2), MCA). The requirement of holding a public hearing does not apply to the first minor subdivision created from a tract of record (76-3-609(2)(d)(ii), MCA). Unless the subdivision lies within an area that has adopted zoning regulations, the application must include a summary of the probable impacts of the proposed subdivision as described in Section 9.5 of these Regulations (76-3-609(2)(c), MCA).

The first minor subdivision shall be reviewed by the governing body of the jurisdiction where the subdivision is located. If the subdivision is within three (3) miles of the City of Billings, the preliminary plat must be reviewed by the reviewing agency as to the effects on the City of Billings (76-3-601(2)(b), MCA). A copy of the application shall also be provided to school district trustees (76-3-601(2)(b), MCA).

If the proposed subdivision lies partly within an incorporated city or town, the proposed plat must be submitted to and approved by both the city or town and county governing body (76-3-601 (2)(c), MCA).

A. **Preapplication Meeting (76-3-504(1)(q), MCA).** The purpose of the preapplication meeting is to provide the subdivider with requirements of local subdivision regulations and the Montana Subdivision and Platting Act and to provide non-binding recommendations of design alternatives. A preapplication meeting must be requested no later than twenty (20) working days and no earlier than one hundred and twenty (120) working days prior to submittal of a minor preliminary plat application for completeness review. At the time of request, the subdivider shall provide the Planning Director or designee with ten (10) sketch plans of the proposed subdivision for review and discussion. The sketch plan should be legibly drawn to scale no greater than 1 inch = 400 feet (1:4,800), showing in simple form the layout of proposed features in relation to existing conditions. The sketch plan may be a freehand sketch made directly on a print of a topographic map. See Appendix C for recommended preapplication sketch plan contents and other meeting recommendations.

   The Planning Director or designee will schedule the preapplication meeting to occur within fifteen (15) working days of the receipt of the sketch plan, and shall notify the subdivider and any affected County Departments of the time and place of the meeting.

   The preapplication meeting shall not constitute approval of a preliminary or final plat. Rather, it shall be deemed an expression of general acceptance of the sketch plan submitted and an opportunity to offer other layout options.

B. **Preapplication Completeness Review (76-3-609(2)(a), MCA).** One (1) month prior to a submittal deadline for minor preliminary plat applications, the subdivider shall submit one (1) copy of the application including the preliminary plat and supporting documents to the Planning Director or designee for review. After receipt of the copy the Planning Director or designee shall notify the subdivider within five (5) working days as to the completeness of the application. A complete application will include all those items listed in Appendix D "Preliminary Plat Requirements", where applicable, and any additional information identified at the preapplication meeting. If the Planning Director or designee determines the application is complete, the subdivider may submit the application, plat and supporting documentation for sufficiency review. If the Planning Director or designee determines the application is incomplete, the subdivider must correct the deficiencies and resubmit the application.

C. **Preapplication Sufficiency Review (76-3-609(2)(a), MCA).** Within fifteen (15) working days after notifying the applicant that the application is complete, the Planning Director or designee will determine that the information in the application is sufficient to allow for review of the proposed subdivision. If the Planning Director or designee determines the information is sufficient, the applicant will be notified that the complete and sufficient application may be submitted at the application submittal deadline. If the Planning Director or designee determines the information is insufficient, the subdivider must correct the deficiencies prior to the next submittal deadline or postpone submittal to a future submittal deadline.

D. **First Minor Preliminary Plat Application Submittal.**

1. **Required**. The subdivider shall submit to the Planning Director or designee, for review and recommendation, a preliminary plat of the proposed first minor subdivision which conforms to the requirements of these Regulations.

   Any information required in submittal of plats and supporting documents relating to the practice of land surveying shall be performed by a land surveyor licensed to practice in the State of Montana.

   Any information required in submittal of plats and supporting documents relating to the practice of engineering shall be performed by a professional engineer, competent in civil engineering, licensed to practice in the State of Montana.

2. **Application submittal**. Complete and sufficient application for first minor preliminary plat approval shall be made to the Planning Director or designee on or before 3:00 p.m. on the first or fifteenth day of any given month. When the date of submittal falls on a weekend or holiday, the submittal shall be on the following working day by 3:00 p.m. The application form is provided in Appendix E "Preliminary Plat Application" and must be accompanied by the required preliminary plat, supporting documents and applicable fee.

3. **Review period.** Upon receipt of a complete application, the governing body has thirty-five (35) working days to approve, conditionally approve, or deny the preliminary plat application. The review period may be extended upon written consent from the subdivider (76-3-609(2)(a), MCA).

E. **Preliminary Plat Contents and Submittal Copies.**

1. **Content.** The preliminary plat shall clearly show the information listed in Appendix D "Preliminary Plat Requirements."

2. **Copies.** The subdivider shall provide the number of copies of the preliminary plat as determined by the Planning Director or designee. All plats shall be 24 inch by 36 inch size or 11 inch by 17 inch size as specified by the Planning Director or designee. Electronic copies of the plat shall be provided as follows; One (1) copy in .pdf, .jpg or .tif format is required, and one (1) copy in either .dwg or .dxf format is requested.

F. **Supporting Documentation.**

1. **Required documents.** The supporting information shall include those documents listed in Appendix G "Required Supporting Documents for First Minor Preliminary Plat Applications."
2. **Required copies.** The subdivider shall provide the number of copies of the supporting documents as determined by the Planning Director or designee. All documents shall be typed and in a format specified by the Planning Director or designee.

G. **Staff and Agency Review.**

1. **Review procedure schedule.** Upon receipt of a complete and sufficient first minor preliminary plat application, the Planning Director or designee shall develop a schedule for the review period. The schedule shall include the dates, times and location of all key meetings, actions and the dates of all key deadlines.

2. **Submittal distribution.** Planning staff shall distribute the application to all affected County Departments, local, state, and federal agencies, school districts and public utilities for review, and include a copy of the review procedure schedule. These affected entities shall determine what effect the proposed subdivision may have on their ability to provide services and submit recommendations for mitigation of those impacts. The affected entities shall respond to the Planning staff within approximately fifteen (15) working days. A public utility or agency review may not delay the governing body's action on the plan beyond the 35-working day review period. Failure of any agency to complete a review of a plat will not be the basis for denial of the plat by the governing body (76-3-504 (1)(i), MCA).

3. **Staff report.** Planning staff shall prepare a staff report and presentation for the governing body. A copy of the report shall be provided to the subdivider at least five (5) working days prior to the governing body meeting. The staff report shall provide a recommendation for approval, conditional approval or denial of the application and draft findings of fact as basis for the recommendation.

H. **Governing Body Action.** At a regularly scheduled meeting the governing body shall consider the following information in deciding whether to approve, conditionally approve, or deny a preliminary plat:

1. Unless the subdivision is proposed in an area that is zoned, the effect on agriculture, agricultural water user facilities, local services, the natural environment, wildlife, wildlife habitat, and public health and safety (76-3-608(3)(a), MCA); and

2. Compliance with:
   a. The Montana Subdivisions and Platting Act (76-3-101 et seq., MCA) (76-3-608(3)(b), MCA); and

   b. the provision of easements for the location and installation of any planned utilities (76-3-608(3)(c), MCA); and

   c. the provision of legal and physical access to each parcel within the subdivision (76-3-608(3)(d), MCA); and

   d. The required notation of that access on the applicable plat and any instrument of transfer concerning the parcel (76-3-608(3)(d), MCA); and

e. Local zoning requirements; and

3. Consistency with the adopted Growth Policy, Transportation Plan, and the Heritage Trail Plan; and

4. A summary of probable impacts prepared by the subdivider in accordance with Section 9.5 of these Regulations.

5. The governing body shall give due weight and consideration to the subdivider's expressed preferences (76-3-608(5)(b), MCA). The governing body may not deny approval of a subdivision based solely on the subdivision's impacts on educational services, or based solely on parcels within the subdivision having been designated as wildland-urban interface parcels under 76-13-145, MCA (76-3-608(1), MCA), or solely on compliance with the Growth Policy (76-3-605(2)(b), MCA).

6. The governing body shall issue written findings of fact that weigh the criteria listed in this section. The governing body shall determine if there are any significant adverse impacts the subdivision may have based on its review of this information and formulate conditions to reasonably minimize those impacts (76-3-608(4), MCA).

7. In reviewing a subdivision and when requiring mitigation, the governing body may not unreasonably restrict a landowner's ability to develop land, but it is recognized that in some instances the unmitigated impacts of a proposed development may be unacceptable and will preclude approval of the plat (76-3-608(5)(a), MCA).

8. The governing body shall approve, conditionally approve or deny the preliminary plat within thirty-five (35) working days of the submittal deadline and when the application was considered complete and sufficient. The governing body shall send to the subdivider a letter within thirty (30) working days of its decision stating the reasons for the denial or enumerating the conditions which must be met to assure approval of the final plat, along with written findings of fact (76-3-608(4), MCA).

I. **Preliminary Plat Approval Period** (76-3-610(1), MCA). The approval or conditional approval shall be valid for not more than three (3) calendar years. At the end of this period the County Commissioners may, at the request of the subdivider, extend its approval for a mutually agreed-upon period of time. Any mutually agreed-upon extension must be in writing and dated and signed by the governing body and the subdivider or subdivider's agent. The governing body may issue more than one extension.

When considering a request for an extension of the preliminary plat approval period, the governing body may use the following criteria to evaluate the request:

1. Changes to the subdivision regulations since the original approval and whether the subdivision as originally approved is essentially compliant with the new regulations;

2. Progress to date in completing the subdivision as a whole and any phases;

3. Phasing of the subdivision and the ability for the existing development to operate without the delayed development;

4. Dependence of infrastructure development on the subdivision;

5. Duration of the requested extension;

6. Demonstrated ability of the subdivider to complete the subdivision;

7. Such other factors or criteria as deemed material in the discretion of the governing body.

After the preliminary plat is approved, the governing body may not impose any additional conditions as a prerequisite to final plat approval, providing the approval is obtained within the original or extended approval period described above (76-3-610(2), MCA).

J. **Appeal Process.** A decision of the governing body regarding a proposed subdivision may be appealed to the district court, as provided in Section 11.5 of these Regulations and 76-3-625, MCA.

K. **Final Plat.** A final plat application shall be submitted for review and approval following the procedures outlined in Section 3.7 of this Chapter prior to the expiration of the preliminary plat approval period.

Section 3.4 Subsequent Minor Subdivisions (76-3-609(3), MCA).

Divisions of land creating five (5) or fewer lots that are not first minor subdivisions from a tract of record shall be reviewed as major subdivisions in accordance with Section 3.2 of this Chapter (76-3-609(4), MCA). The subsequent minor subdivision will be reviewed by the governing body in the jurisdiction where it is located. If the subdivision is within three (3) miles of the City of Billings, the preliminary plat must be reviewed by the reviewing agency as to the effects on the City of Billings (76-3-601(2)(b), MCA). A copy of the application shall also be provided to school district trustees (76-3-601(2)(b), MCA).

Section 3.5 Subdivisions Qualifying for Expedited Review (76-3-609(2)(e), MCA).

A. **Eligibility**. Subdivisions, hereafter referred to as "expedited review plats" containing one (1) or two (2) parcels are eligible for expedited review when:

1. They meet the definition of a first minor subdivision from a tract of record, and

2. Legal and physical access to all lots is provided, and

3. No land in the subdivision will be dedicated to public use for parks or playgrounds, and

4. The plat has been approved by the Montana Department of Environmental Quality or County Environmental Health whenever approval is required[2], and

5. No public improvements are required.

If the proposed subdivision lies partly within an incorporated city or town, the proposed plat must be submitted to and approved by both the city or town and county governing body (76-3-601(2)(c), MCA).

B. **Preapplication Meeting (76-3-504(1)(q), MCA).** The purpose of the preapplication meeting is to provide the subdivider with requirements of local subdivision regulations and the Montana Subdivision and Platting Act. A preapplication meeting must be requested no later than twenty (20) working days and no earlier than one hundred and twenty (120) working days prior to final plat submittal. At the time of request, the subdivider shall provide the Planning Director or designee with ten (10) sketch plans of the proposed subdivision for review and discussion. The sketch plan should be legibly drawn to scale no greater than 1 inch = 400 feet (1:4,800), showing in simple form the layout of proposed features in relation to existing conditions. The sketch plan may be a freehand sketch made directly on a print of a topographic map. See Appendix C for recommended preapplication sketch plan contents and other meeting recommendations.

The Planning Director or designee will schedule the preapplication meeting to occur with fifteen (15) working days of the receipt of the sketch plan, and shall notify the subdivider and any affected County Departments of the time and place of the meeting.

The preapplication meeting shall not constitute approval of a preliminary or final plat. Rather, it shall be deemed an expression of general acceptance of the sketch plan submitted.

C. **Expedited Review Plat Application Submittal**

1. **Required.** The subdivider shall submit to the Planning Director or designee, for review and recommendation, a final plat of the proposed minor subdivision which conforms to the requirements of Section 3.7 of this Chapter.

[2] If MDEQ or County Health approval has not yet been obtained, the applicant may submit a checkprint for review and approval to the Planning Department. The applicant may submit the checkprint approval to MDEQ or County Health as required as proof of preliminary plat approval. Proof of MDEQ or County Health approval must be submitted with the final plat and supplemental documents prior to recording the final plat.

Any information required in submittal of plats and supporting documents relating to the practice of land surveying shall be performed by a land surveyor licensed to practice in the State of Montana.

Any information required in submittal of plats and supporting documents relating to the practice of engineering shall be performed by a professional engineer, competent in civil engineering, licensed to practice in the State of Montana.

2. **Checkprint.** Prior to submitting the final plat on mylar, a subdivider must submit six (6) copies of a final plat application, six (6) paper prints of the final plat, and six (6) draft copies of the supporting documents to the Planning Director or designee for review. The final plat application form is provided in Appendix H "Expedited Final Plat Application" and the form and content of the checkprint and the supporting documents are described in Appendix J "Final Plat Requirements". The final plat review fee and the subdivision title commitment or title report are also required.

   One (1) copy of the checkprint and supporting documents shall be forwarded each to the County Public Works Department, the County Attorney's Department, the County GIS Department, and the County Clerk and Recorder for their review and comment. Additionally, one (1) copy of the checkprint and supporting documents shall be sent to the fire department having jurisdiction for their review and comment. The reviewing departments shall notify Planning staff of any changes requested to conform to the local regulations and state law within ten (10) working days after receipt of the checkprint.

   Planning staff shall notify the subdivider no later than fifteen (15) working days after receipt of the checkprint of any changes required. A red-lined copy of the checkprint shall be returned to the subdivider along with the reviewer's comments. If the checkprint is approved by all reviewing departments, the Planning staff shall provide a letter to the County Health Department or the Montana Department of Environmental Quality stating that the plat has been reviewed and is recommended for approval. This letter shall be submitted by the applicant along with their application for sanitary facility approval as proof that the proposed plat has been reviewed and approved.

3. **Application submittal.** Once the checkprint review has been completed, application for expedited plat approval shall be submitted to the Planning Director or designee on or before 3:00 p.m. at least twenty-five (25) working days prior to the date of a regularly scheduled meeting of the governing body. The application form is provided in Appendix H "Expedited Final Plat Application" and must be accompanied by the required final plat, supporting documents and applicable fee.

D. **Final Plat and Supporting Documents Contents and Submittal Copies.** The subdivider shall submit one (1) electronic copy in .pdf, .jpg or .tif format and if available, one (1) copy in either AutoCad ® or ArcGIS ® format. The subdivider must also submit one (1) signed mylar original of the final plat. The form and content of final plat is

provided in Appendix J "Final Plat Requirements." The final plat must be accompanied by a complete expedited review plat application form as provided in Appendix H "Expedited Final Plat Application", a subdivision title commitment or title guarantee prepared within the previous six (6) months, all supporting documents and the required review fee.

E. **Review Procedure.** Planning staff shall route the application, final plat and supporting documents to the appropriate departments and officials for their signatures within sufficient time to assure the documents are placed on the first available agenda of the governing body for their consideration and authorized signatures.

F. **Governing Body Action.** At a regularly scheduled meeting, the governing body shall consider the following information in deciding whether to approve or deny a final plat:

1. The effect on agriculture, agricultural water user facilities, local services, the natural environment, wildlife, wildlife habitat, and public health and safety (76-3-608 (3)(a), MCA); and

2. Compliance with:

   a. The Montana Subdivisions and Platting Act (76-3-101 et seq., MCA) (76-3-608 (3)(b), MCA); and

   b. The provision of easements for the location and installation of any planned utilities(76-3-608(3)(c), MCA); and

   c. The provision of legal and physical access to each parcel within the subdivision (76-3-608(3)(d), MCA); and

   d. The required notation of that access on the applicable plat and any instrument of transfer concerning the parcel (76-3-608(3)(d), MCA); and

   e. Local zoning requirements; and

3. Consistency with the adopted Growth Policy, Transportation Plan, and the Heritage Trail Plan.

4. The governing body shall give due weight and consideration to the subdivider's expressed preferences (76-3-608(5)(b), MCA). The governing body may not deny approval of a subdivision based solely on the subdivision's impacts on educational services, or based solely on parcels within the subdivision having been designated as wildland-urban interface parcels under 76-13-145, MCA (76-3-608(1), MCA), or based solely on compliance with the Growth Policy (76-3-605(2)(b), MCA).

5. In the event the governing body denies the final plat, it shall send a letter within thirty (30) working days of its decision to the subdivider stating the basis for the denial along with written findings of fact (76-3-608(4), MCA).

G. **Approval Period.** Final plat approval shall be in force not more than twelve (12) months from the date of the governing body's approval. At the end of the period the governing body may, at the request of the subdivider, after review and recommendation of the County Planning Board, extend its approval for no more than twelve (12) months.

After all required signatures have been obtained; the plat shall be recorded with the County Clerk and Recorder within the twelve (12) months of the date of approval.

Section 3.6 Amended Plats.

A. **Required.** A division of lots within a platted subdivision filed with the County Clerk and Recorder that results in an increase in the number of lots, or that redesigns or rearranges six (6) or more lots must be reviewed and approved by the governing body and an amended plat must be filed with the County Clerk and Recorder (76-3-207(2)(a), MCA).

B. **Eligibility.** Amended plats shall be processed as first minor subdivisions, as described in Section 3.3 of this Chapter, if they meet the following criteria:

1. Legal and physical access to all lots is provided; and

2. No land in the subdivision will be dedicated to public use for parks or playgrounds; and

3. The plat has been approved by the Montana Department of Environmental Quality or County Environmental Health whenever approval is required or no public improvements are required; and

4. The amended plat creates no more than five additional lots.

Amended plats not meeting these criteria shall be reviewed as major subdivisions.

C. **Form and Content.** An amended plat shall be entitled "Amended Plat" and follow the form and content shown in Appendix D "Preliminary Plat Requirements."

Section 3.7 Final Plat Submittal Requirements.

A. **Required.** After receiving a preliminary plat approval for a major, first minor or subsequent minor, the subdivider may submit a final plat of the proposed subdivision as required by these Regulations. The final plat shall incorporate all required conditions and changes and conform to the approved preliminary plat and this Section.

B. **Checkprint.** Prior to submitting the final plat on mylar, a subdivider must submit six (6) copies of a final plat application, six (6) paper prints of the final plat, and six (6) draft copies of the supporting documents to the Planning Director or designee for review. The final plat application form is provided in Appendix I "Final Plat Application" and the form and content of the checkprint and the supporting documents are described in Appendix J "Final Plat Requirements". The final plat review fee and the subdivision title commitment or title report are also required at this stage. The Planning Director or designee may require additional documentation to ascertain whether the conditions of preliminary plat approval have been met.

   One (1) copy of the checkprint and supporting documents shall be forwarded each to the County Public Works Department, the County Attorney's Department, the County GIS Department, and the County Clerk and Recorder for their review and comment. Additionally, one (1) copy of the checkprint and supporting documents shall be sent to the fire department having jurisdiction for their review and comment. The reviewing departments shall notify Planning staff of any changes requested to conform to the local regulations and state law within ten (10) working days after receipt of the checkprint.

   Planning staff shall notify the subdivider no later than fifteen (15) working days after receipt of the checkprint of any changes required. A red-lined copy of the checkprint shall be returned to the subdivider along with the reviewer's comments.

C. **Final Mylar Submittal**. Application for final plat approval shall be submitted to the Planning Director or designee on or before 3:00 p.m. at least twenty-five (25) working days prior to the date of a regularly scheduled meeting of the governing body. The subdivider shall submit one (1) electronic copy in .pdf, .jpg or .tif format and if available, one (1) copy in either AutoCad ® or ArcGIS ® format. The subdivider must also submit one (1) signed mylar originals of the final plat. The form and content of final plat is provided in Appendix J "Final Plat Requirements." The final plats must be accompanied by a complete final plat application form as provided in Appendix I "Final Plat Application", a subdivision title commitment or title guarantee prepared within the previous six (6) months, all supporting documents and the required review fee.

D. **Review Procedure.** Planning staff shall route the application, final plat and supporting documents to the appropriate departments and officials for their signatures within sufficient time to assure the documents are placed on the first available agenda of the governing body for their consideration and authorized signatures.

E. **Approval Period.** Final plat approval shall be in force not more than twelve (12) months from the date of approval by the Board of County Commissioners. At the end of the period the Board of County Commissioners may, at the written request of the subdivider, after review and recommendation of the Planning Board, extend its approval for no more than twelve (12) months.

Section 3.8 Flowchart of Subdivision Procedures.

MAJOR SUBDIVISION	FIRST MINOR	SUBSEQUENT MINOR	EXPEDITED REVIEW
Preapplication Meeting 120 – 20 working days prior to preliminary plat completeness review submittal	Preapplication Meeting 120 – 20 working days prior to preliminary plat completeness review submittal	Preapplication Meeting 120 – 20 working days prior to preliminary plat completeness review submittal	Preapplication Meeting 120 – 20 working days prior to expedited plat checkprint submittal
↓	↓	↓	↓
Completeness and Sufficiency Review 1 month prior to preliminary plat submittal	Completeness and Sufficiency Review 1 month prior to preliminary plat submittal	Completeness and Sufficiency Review 1 month prior to preliminary plat submittal	Checkprint Submittal 20 working day review
↓	↓	↓	↓
Preliminary Plat Submittal 1st day of month	Preliminary Plat Submittal 1st and 15th day of month	Preliminary Plat Submittal 1st day of month	Final Plat Submittal
↓	↓	↓	↓
Department/Agency Review 10 working days from submittal	35-working day review	Department/Agency Review 10 working days from submittal	Minimum 25 days prior to governing body action.
↓	↓	↓	↓
Notification Legal, subdivider and adjacent property owners. No less than 15 days prior to public hearing		Notification Legal, subdivider and adjacent property owners. No less than 15 days prior to public hearing	
↓	↓	↓	↓
Department Plat Review Meeting		Department Plat Review Meeting	
↓	↓	↓	↓
Application Resubmittal 6 working days after Department Review Meeting		Application Resubmittal 6 working days after Department Review Meeting	
↓	↓	↓	↓
Final Staff Comments		Final Staff Comments	
↓	↓	↓	↓
Planning Board Plat Review	Governing Body Action	Planning Board Plat Review	Governing Body Action
↓	↓	↓	↓
Planning Board Public Hearing	Final Plat Submittal	Planning Board Public Hearing	
↓	↓	↓	↓
Governing Body Action		Governing Body Action	
↓	↓	↓	↓
Final Plat Submittal		Final Plat Submittal	
60-working day review		60-working day review	

Chapter 4.0 DEVELOPMENT REQUIREMENTS.

Section 4.1 General.

All subdivisions approved by the governing body must comply with the provisions of this Chapter, except where granted a variance pursuant to Section 11.1, Variances, of these Regulations. The requirements contained in this Chapter apply to subdivisions within areas of Yellowstone County as outlined in Section 1.4 of these Regulations, except when otherwise separately specified.

Section 4.2 Conformance with Zoning.

In addition to the standards outlined in this Chapter, the design and development of a subdivision must conform to any applicable zoning regulations as found in the Unified Zoning Regulations (Article 27, BMCC).

Section 4.3 Improvement Design.

Engineering and survey plans, specifications, and reports required in connection with public improvements and other elements of the subdivision required by the governing body must be prepared by a professional engineer or professional land surveyor as their respective licensing laws allow in accordance with the Montana Subdivision and Platting Act (MSPA) and these regulations.

Section 4.4 Lots.

A. **Regulation of Lots**: Each lot must contain a building site that conforms to Yellowstone City-County Health Department regulations, the Unified Zoning Regulations where applicable, the regulations of this Chapter and other applicable State or local regulations.

B. **Dimensions, Orientation and Topography**: The lot size, depth, shape and orientation shall be appropriate for the location, contemplated use of the subdivision and the zoning of the property. Flag lots shall be discouraged except in cases where they are necessary due to topography or other physical constraints on the property. Areas of lots with more than 25% grade for building sites shall be subject to a geotechnical analysis. Areas within the subdivision with a slope of 25% or greater shall be identified on the face of the preliminary and final plats.

C. **Frontage:** Residential lots shall have a minimum of thirty-two (32) feet of frontage on a public right of way, public road easement, private access easement, or private driveway easement. Lots in commercial and industrial districts shall have a minimum lot width frontage of forty-four (44) feet on a public right of way, public road easement, private easement, or private driveway easement, or through a reciprocal access easement.

D. **Division by Rights-of-Way**: No single lot may be divided by a public road, alley, or access easement.

E. **Rural Lot Limitations**: Residential or commercial lots not served by public sewer or public water systems shall not be less in area than what is required by Montana Department of Environmental Quality regulations. There is nothing contained in this Chapter that shall be construed as preventing the MDEQ or the County environmental health regulatory agency from requiring that all or any portion of a subdivision shall not be built upon, or that the proposed lot sizes must be increased to ensure protection of public health.

F. **Corner Lots:** Design of corner lots must meet the following requirements:

1. Corner lots must be of sufficient size to provide a building site while meeting the clear vision requirements specified in the most current American Association of State Highway and Transportation Officials (AASHTO) Manual guidelines.

2. Residential corner lots adjacent to a street identified as a Principal or Minor Arterial must have vehicular access only to an internal street in the subdivision identified as a Collector or Residential street, except when limited by topography or other physical constraints of the property.

G. **Double Frontage Lots:** Double frontage lots (See Figure 2.1) are allowable when they are necessary due to topography and when a one (1) foot wide no-access easement is provided for separation of residential development from railroad or major street rights-of-way.

1. Residential Areas: For any residential subdivision where an arterial street abuts or runs through any portion of the subdivision, the subdivision plan shall provide for lots to back up to the arterial street and provide a one (1) foot wide no-access easement to prevent vehicle access to the arterial street.

2. Commercial Areas: For any commercial subdivision where an arterial street abuts or runs through any portion of the subdivision, the subdivision plan shall provide for shared accesses to the arterial street or access via internal roads with a one (1) foot wide no-access easement to prevent uncontrolled vehicle access to the arterial street.

Section 4.5 Blocks.

A. **Size and Orientation:** Length, width and shape of blocks shall be determined with consideration of the following:

1. Provision of adequate building sites suitable to the needs of the type of use contemplated;

2. Needs for convenient and necessary access, circulation, traffic control and traffic safety, and public safety;

3. Limitations or opportunities created by the topography.

B. **Rights-Of-Way for Internal Non-motorized Connections:** Public rights-of-way for internal non-motorized connections within blocks will be required when essential to provide circulation or safe access to schools, playgrounds, shopping, transportation and other community facilities. Pathways shall also be installed at the end of cul-de-sacs where deemed appropriate by the Board of County Commissioners.

C. **Block Numbering:** All blocks shall be identified with Arabic numerals.

Section 4.6 Streets and Roads.

A. **Road Network Performance Standards:** When evaluating a subdivision's road network, subdividers and reviewing agencies shall take into consideration the following criteria. These criteria were developed to ensure that all new lots are provided access that is safe, convenient and effective for future lot owners. The proposed road network shall also enable emergency service providers to protect life and property under severe emergency situations.

1. Every lot shall have documented legal and physical access.

2. Physical access shall be provided in conformance to the standards found in the subdivision regulations.

3. There shall be right-of-way and road connections made when existing roads or platted roads outside of the subdivision connect to the subject parcel.

4. Proposed roads shall be looped or connected to other roads whenever possible. Exceptions can be made when there are topographic features that prevent connections or when the legal status of the road prevents connection.

5. Dead end roads and/or driveways greater than 150 feet in length must have an approved turn-around at their terminus.

6. Major and subsequent minor subdivisions shall have at least two means of vehicular access unless exempted in Section 4.6.B.5.

7. Dead end roads shall not be more than 1000 feet in length.

8. When access roads cannot be installed as required above in #6 & #7 due to location on property, topography, waterways, nonnegotiable grades or other similar conditions, the fire department having authority may recommend additional fire protection measures, including, but not limited to, the installation of a secondary fire apparatus access road, additional water supply, widening of roads, and/or additional pullouts or turnarounds.

Figure 4.6.A.1. Road Network Evaluation Flowchart

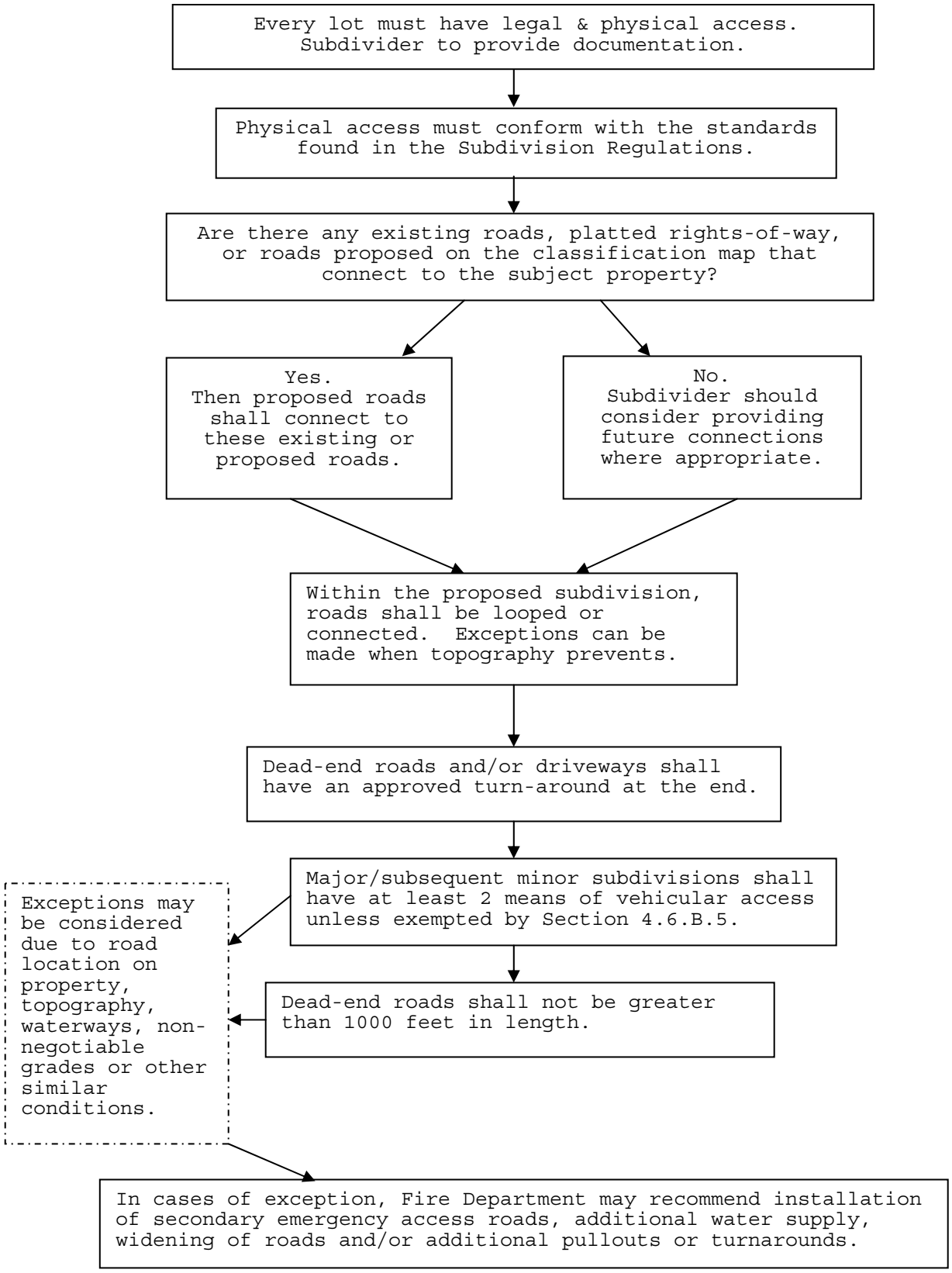

B. **Streets and Roads, General:** The arrangement, type, extent, width, grade, and location of all streets shall be designed with consideration to any adopted area plans including, but not limited to, the Growth Policy and Transportation Plan, and must be considered in their relation to existing and planned streets, topographical conditions, public convenience and safety, and the proposed uses of the land to be served by them.

1. Relation to Undeveloped Areas: When a proposed subdivision adjoins undeveloped land, streets within the proposed subdivision shall be arranged to allow access to the adjoining undeveloped land. Street right-of-way within the proposed subdivision shall be provided to the boundary lines of the tract to be developed, unless prevented by topography or other physical conditions.

2. Relation to Developed Areas: The subdivider shall arrange the streets to provide for the continuation of streets between adjacent developed properties when such continuation is necessary for the convenient movement of traffic, effective provision of emergency services and efficient provision of utilities. Such provision may be waived where the adjacent land use is incompatible with the proposed subdivision, or when prevented by topography or other physical conditions.

3. Separation of Through and Local Traffic: Whenever a subdivision abuts or contains an existing or proposed highway, Arterial street or Collector street, the subdivider may be required to provide frontage roads, reverse frontage lots with a no-access strip preventing access along the rear property lines, planting or fencing screens, shared accesses, or other treatment as may be necessary to adequately protect residential properties and to separate through and local traffic.

4. Distance between Parallel Right-of-Way: Where a subdivision borders on or contains a railroad, limited access highway, canal, stream or ditch right-of-way, the subdivider may be required to provide a street or easement approximately parallel to and on each side of the right-of-way at a distance sufficient to allow for the operations and maintenance of the intervening land. Such distances shall also be determined with regard for the requirements of approach grades and future grade separation.

5. Second Access: To facilitate traffic movement, the provision of emergency services, and the placement of utility easements, all major subdivisions and subsequent minor subdivisions shall provide at least two means of vehicular access built to the standards of this Chapter and designed to ensure public health and safety.

   Exceptions to the requirement to provide at least two means of vehicular access may be made for major and minor subdivisions that meet all of the following criteria:
   - Access is provided by a cul-de-sac with an approved turnaround that is 1,000 feet or less in length; and
   - The subject cul-de-sac is served by a local, collector, or arterial road that is not classified as a dead end road; and
   - The subject cul-de-sac serves no more than 12 lots, or no more than 20 lots that are zoned residential.

Provision of a second means of vehicular access may be required for any subdivision when deemed necessary for public health, safety and welfare.

When not otherwise exempt, if a second means of vehicular access built to County road standards cannot be provided for reasons of topography or other physical conditions, the subdivider shall provide an emergency secondary access road, built to the standards detailed in Section 4.14 of these Regulations.

6. Dead-end Roads: Dead-end access roads in excess of one hundred fifty (150) feet shall not be permitted without an approved turn around at the terminus. Where such roads terminate, the subdivider shall provide a "cul-de-sac" or "hammerhead-T" turnaround conforming to the design standards outlined in Figure 4.6.C.4. In cases where a dead-end road may be extended in the future, a right-of-way easement or dedication may be required to be provided.

7. Half Streets: Half streets are allowed when they are essential to the subdivision, are beneficial to the County, or when the County Public Works Department is satisfied that the other half of the street will be dedicated to the public when the adjoining property is subdivided. When an existing half street is adjacent to a tract to be subdivided, the other half of the street must be platted within the new subdivision.

8. Street Continuity: Streets that are a continuation of streets in contiguous territory shall be so aligned as to assure that their centerlines shall coincide and shall have matching names. In cases where straight continuations are not physically possible, such centerline shall be continued by a centerline offset of not less than one hundred twenty-five (125) feet.

9. Tangent for Reverse Curves: A tangent shall be introduced where necessary between reverse curves on Arterial and Collector streets as determined by a Professional Engineer licensed in the State of Montana.

10. Deflected Street Lines to be Curved: When continuing street lines deflect from each other at any one point by more than five (5) degrees, they shall be connected by a curve with a radius adequate to ensure stopping sight distance at the center line of a street in accordance with the most current American Association of State Highway and Transportation Officials (AASHTO) Manual guidelines.

11. Intersections: Local streets shall be laid out so as to intersect as nearly as possible at right angles and no local street shall intersect any other local street at less than eight (80) degrees. Such angle of 80 degrees or greater shall be retained for at least fifty (50) feet back from the intersection. Any street intersection involving an arterial and/or collector streets shall intersect at ninety (90) degrees, shall be retained for at least one hundred (100) feet back from the intersection. Not more than two (2) streets shall intersect at any one point unless warranted by design by a Professional Engineer licensed in the State of Montana and reviewed by the County Public Works Department.

12. Lot Corners at intersections: Lot corners at all street intersections shall be rounded with a minimum radius of ten (10) feet.

13. Sight distance: The alignment of all streets and roads must provide adequate sight distances in accordance with the most current American Association of State Highway and Transportation Officials (AASHTO) Manual guidelines. Intersections must be designed to provide adequate visibility for traffic safety based on the designed operating speeds of the intersecting roadways.
14. Approach Permits: The subdivider shall obtain the applicable approach or access permits for all new accesses to County roads. For any new vehicular access onto a state controlled road or highway, the subdivider shall obtain an approach permit approved by the Montana Department of Transportation (MDT).

15. Street/Road Names and Addressing: New streets/roads aligned with existing streets/roads shall have the same name as the existing street/road. All new street/road names shall be approved by the Yellowstone County GIS Department prior to final plat approval in order to avoid duplication and confusion with names of existing roads. County lot addresses are assigned by County GIS in conjunction with issuance of an approach permit by County Public Works.

16. Street/Road Signs and Traffic Control Devices: Street or road signs and traffic control devices of the size, shape, and height in conformance with the standards contained in the *Manual on Uniform Traffic Control Devices* must be placed at all intersections.

17. Central Mail Delivery: When required by the United States Postal Service, the developer must provide a cluster/gang mailbox for mail delivery.

18. Road Design and Improvement Standards: All streets and roads, existing or proposed, within and adjacent to a proposed County subdivision shall meet the design and improvement standards outlined in Section 4.6.C. of this Chapter, as well as the design specifications required by the County Public Works Department.

19. Street/Road Maintenance: The subdivider shall establish a new Rural Special Improvement District (RSID) or expand an existing adjacent RSID prior to final plat approval to provide funds for ongoing maintenance for all new public improvements associated with the subdivision. These improvements may include, but not be limited to, new roads, bridges, culverts, street signs, and any other public improvements resulting from the subdivision.

C. **Road and Street Performance Standards for Subdivisions**

1. General: The design and improvement standards contained in this section shall apply to all construction and reconstruction of streets and roads within subdivisions in Yellowstone County.

2. Improvement Design: All street improvements shall be designed by and constructed under the supervision of a professional engineer, competent in civil engineering, licensed in the State of Montana. All improvements shall meet or exceed the right-of-way and construction standards for the type of street to be constructed found within these Regulations, the adopted transportation plan, and adopted policies of the County Public Works Department.

3. Plans and Specifications: Plans and specifications for all public or private streets shall be prepared by a professional engineer, competent in civil engineering, licensed in the State of Montana. A complete set of plans and specifications certified with the responsible Professional Engineer's embossed seal shall be provided to the County Public Works Department prior to initiation of any street improvement construction. The subdivider shall provide professional engineering services for construction inspections, and post-construction certifications. Record drawings shall be submitted to the County Public Works Department upon completion of construction.
   Post Construction Certifications shall include, but not be limited to, the following:
   1. Compaction test results;
   2. Certification that all required improvements are complete;
   3. Certification that the subdivider knows of no defects from any cause in those improvements;
   4. Certification that these improvements are free and clear of any encumbrance or lien;
   5. The method by which the one year guarantee is to be provided;
   6. A schedule of actual construction costs shall be filed with the Public Works Department.

4. Road and Traffic Studies (see Figure 4.6.C.1)

   A. Road Evaluation Study for Unpaved Roads: If existing or proposed roads leading to and/or within the proposed subdivision are unpaved, prior to preliminary plat review, a Road Evaluation Study (RES) shall be done by a licensed engineer to determine the viability of roads serving a proposed subdivision. Roads serving a subdivision are defined as the primary road or roads leading to the subdivision, and any on-site or proposed new roads serving the subdivision. Expedited plats are exempt from the RES requirement.

      The RES should determine the probable impact the proposed subdivision will have on the existing and proposed road network by describing the following characteristics of the existing roads leading to the subdivision and any on site or proposed new roads serving the subdivision.
      - Road surface, section thickness, base type and thickness
      - Existing type of traffic and traffic loads; expected type and load from proposed subdivision
      - Topography
      - Stormwater provisions—existing and possible impacts to roads

- Maintenance records for existing roads – grading, dust control, etc.
- Accident data for existing roads
- Sight distances for existing and proposed roads
- Grades of existing and proposed roads

Probable impacts from the subdivision shall be mitigated and a mitigation plan shall be proposed. If there significant impacts to existing and proposed roads identified in the RES or as determined by County Public Works Department, a more detailed Traffic Impact Study shall be completed as described below in B.

B. Traffic Impact Study: A Traffic Impact Study (TIS) shall be prepared by a licensed engineer specializing in traffic applications and submitted with the preliminary plat application for any new residential, institutional, commercial or industrial development which will generate five hundred (500) or more vehicular trips per day, as referenced in the most current edition of the Trip Generation manual of the Institute of Transportation Engineers. A vehicular trip is defined as a one-way journey of a person in an automobile or a transit vehicle. A TIS may also be required when significant impacts are identified by the RES.

If the study indicates a need for road surface improvements, installation of traffic signals, intersection improvements, or other on or off-site road improvements to facilitate traffic loads or flow generated by the entire proposed development, the subdivider shall be responsible for his/her proportional share of those improvements. The study shall include, but not be limited to the following:

a. Trip generation, using the Institute of Transportation Engineers Trip Generation Manual;
b. Trip distribution;
c. Traffic assignment;
d. Capacity analysis;
e. Evaluation; and
f. Recommended access plan, including access points, modifications and any mitigation techniques.
g. Land use and trip generation in the form of a table of each type of land use, the number of units or square footage, as appropriate, the trip rates used (daily and peak) and resulting trip generation.
h. Traffic graphics, which show:
    - AM peak hour site traffic;
    - PM peak hour site traffic;
    - AM peak hour total traffic;
    - PM peak hour total traffic;
    - Total daily traffic (with site generated traffic shown separately).
i. AM and PM capacity analysis with an AM and PM peak hour capacity analysis provided for:
    - All major drive accesses that intersect collector or arterial streets or roads; and

- All arterial-arterial, collector-collector and arterial-collector intersections within one mile of the site.

j. Capacity. Indicate the levels of service (before and after development) of existing and proposed streets and roads, including appropriate intersections, to safely handle any increased traffic. Describe any anticipated increased maintenance that will be necessary due to increased traffic and who will pay the cost of maintenance.

k. Bicycle and Pedestrian Pathways, Lanes and Routes. Describe bicycle and pedestrian pathways, lanes or routes to be developed with the development.

l. Traffic Calming. Detailed drawings of any proposed traffic calming installations, including locations and turning radius templates.

5. Street and Road Right-of-Way Dedication: All streets or alleys within, or providing access to, the proposed subdivision shall be dedicated to the public and accepted by the County except when an approved public access easement or private road is provided in accordance with these Regulations.

6. Access easements: Where access to or within a subdivision is proposed using access easements the subdivider must obtain or provide proper easements of sufficient width to satisfy the requirements of Table 4.6.C.1. The easement shall meet the following:

   a. Easements must be granted by all property owners whose land the easement(s) cross in a signed and notarized document to be recorded with the final plat.

   b. The location of any road easement must be shown on the plat if it is within the subdivision or on a supplemental exhibit if it is off site. The existence of easements must be noted on the face of the final plat and on any deeds or other instruments conveying lots within the subdivision.

   c. All newly created easements shall be written so that they are easements appurtenant that run with the benefited land.

7. Private Roads: Private roads may be allowed within a subdivision if access is restricted with a permanent gate or some other acceptable means at the subdivision entrance. A private road easement shall be provided meeting the criteria listed under Section 4.6.C.6 above. A mechanism for maintenance of any private roads shall be established prior to final plat approval and referenced in the Subdivision Improvement Agreement.

Figure 4.6.C.1: Road Evaluation and Traffic Impact Study Flowchart

*This flowchart is to be used as a guide. Specific guidelines for the road evaluation and traffic impact studies shall be followed as detailed in Section 4.6.4., above.

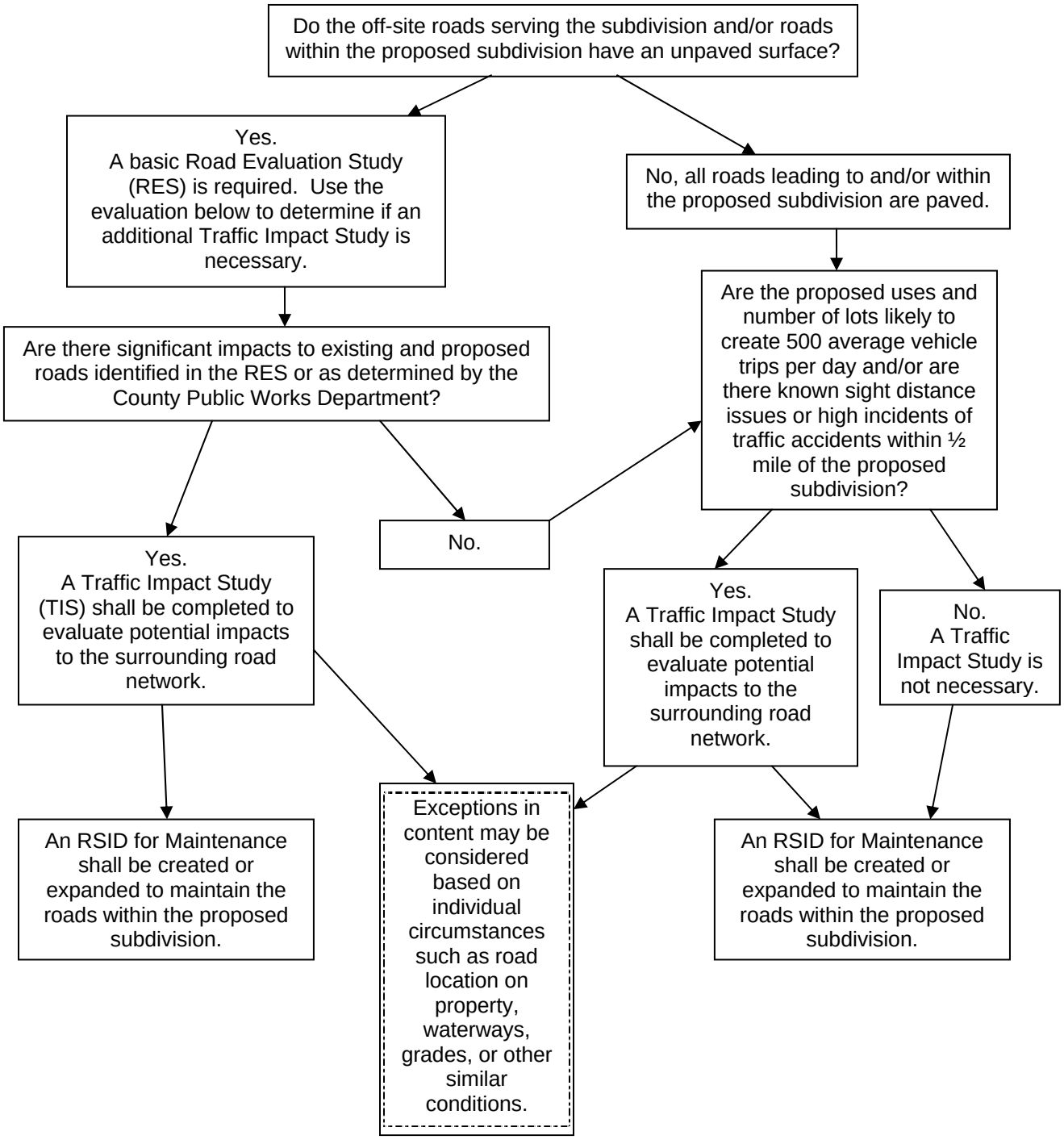

8. Right-of-Way and Street Widths: Street right-of-way and surface widths for all roads, public or private, shall be provided as shown in Table 4.6.C.1., below.

9. Shoulders: Shoulders shall be required on both sides of all roads where no curb and gutter or parking lanes are required. The shoulders shall be two (2) feet wide and graveled, and must meet the specifications of County Public Works.

10. Alleys: Proposed alleys in both residential and commercial subdivision shall meet the following standards:

    a. The width of an alley shall be a minimum of twenty (20) feet.

    b. Alley intersections and sharp changes in alignment shall be avoided, but where necessary, corners shall be designed to permit single unit truck movement.

    c. Dead-end alleys shall be avoided where possible, but if unavoidable, shall be provided with adequate turnaround facilities at the end.

11. Grading/Cut and Fill: All streets and alleys within or adjacent to the subdivision shall be excavated or filled to the grade established by these Regulations.

12. Base Construction: The type of base required will vary depending on the nature of the existing material and with the particular type of traffic to be accommodated, and shall be reviewed by County Public Works according to County specifications unless otherwise warranted by Engineering design. (See Figures 4.6.C.2. and 3.)

13. Street surfacing: All roads within or adjacent to the subdivision shall be paved if they connect to an existing paved road. Also pavement surface shall be required on all streets where a majority of the lots are less than 25,000 square feet in area, and standards for such surfacing shall be according to County specifications unless otherwise warranted by Engineering design. (See Figure 4.6.C.2.)

    Standards for gravel surfaced roads shall be according to County specifications unless otherwise warranted by Engineering design. (See Figure 4.6.C.3.)

14. Street Grades: All street grades shall conform to the requirements of the County. Street grades shall not exceed the following, with due allowance for reasonable vertical curves and intersection treatment.

Street Type	Percent Grade
Arterial	4
Collector	7
Local Access	12

Table 4.6.C.1. Required Dedications and Street Improvements for Subdivisions

Street Type	Right- of-Way	Road Width	Lane Width	Parking Width	Turn lane width	Median Width	Pathway Width
Principal Arterial							
• 6 lanes w/center turn-lane	120’	92’*	12’/14’**	---	14’	---	5’
• 4 lanes w/center turn-lane	120’	92’*	12’/14’**	---	14’	---	5’
Minor Arterial							
• 4 lanes w/median	100’	68’*	12’	---	---	14’	5’
• 2 lanes w/median	100’	52’*	12’	---	---	14’	5’
Commercial Collector							
• 2 lane	80’	44’*	14’	8’	---	---	5’
• 2 lanes w/center turn lane	80’	42’*	14’	---	14’	---	5’
Residential Collector							
• 2 lane	70’	40’*	12’	8’	---	---	5’
• 2 lanes w/center turn lane	80’	50’*	12’	8’	14’	---	5’
Commercial Local Access	60’	28’	12	n/s	---	---	5’
Residential Local Access	56’/60’***	28’	12	n/s	---	---	5’
Cul-de-Sac 100-1000 feet	56’/60’***	28’	12	n/s	---	---	5’
Cul-de-Sac <100 feet	40’	24’ min.	10	n/s	---	---	---

* Widths to be provided if warranted by a RES or TIS.

** Interior lane(s) is 12 feet and the outside lane is 14 feet.

*** 56 feet is required for subdivisions within the zoning jurisdiction. 60 feet is required for subdivisions outside the zoning jurisdiction.

n/s No width is specified.

15. Pedestrian Pathways/Connections: Pedestrian pathways shall be installed with all streets where a majority of the lots are less than 25,000 square feet in area. In lieu of, or in combination with, the required pathways, the subdivider may construct an approved multi-use bicycle/pedestrian path or trail that is connected and accessible to all lots. Required pathway widths shall follow those listed in Table 4.6.C.1. It is recommended that pathway, multi-use path, or trail designs follow the standards provided in the adopted Heritage Trail Plan.

16. Access Driveways: Access driveways are defined as an access serving one or two lots and not more than five dwellings. Accesses serving more than two lots or five dwellings shall be considered a road, and shall be built to the road standards outlined in these Regulations. An approach permit is required for all new access driveways. New driveways shall meet the following standards:

    a. In residential subdivisions, the maximum driveway width shall be thirty (30) feet. The minimum distance between driveways shall be twenty-five (25) feet.

    b. In commercial and industrial subdivisions, the maximum driveway width may be up to fifty (50) feet when approved by the County. The minimum distance between driveways shall be twenty-five (25) feet.

    c. In any allowable location, no driveway width shall be less than twelve (12) feet wide.

    d. Only one driveway shall be provided to any single residential lot unless otherwise approved by the Board of County Commissioners or designee. Additionally, in cases where a lot fronts on a collector or arterial road currently carrying or projected to carry more than 500 vehicles trips per day or where site distances warrant, the County may require shared access drives among lots. The County may permit more than one driveway for commercial lots.

    e. In cases where an access driveway is in excess of 150 feet in length, it shall have a minimum unobstructed width of twenty (20) feet, and shall have an approved turn-around at its terminus (See Figure 4.6.C.5 for acceptable design standards for driveway turn-arounds).

Figure 4.6.C.2.

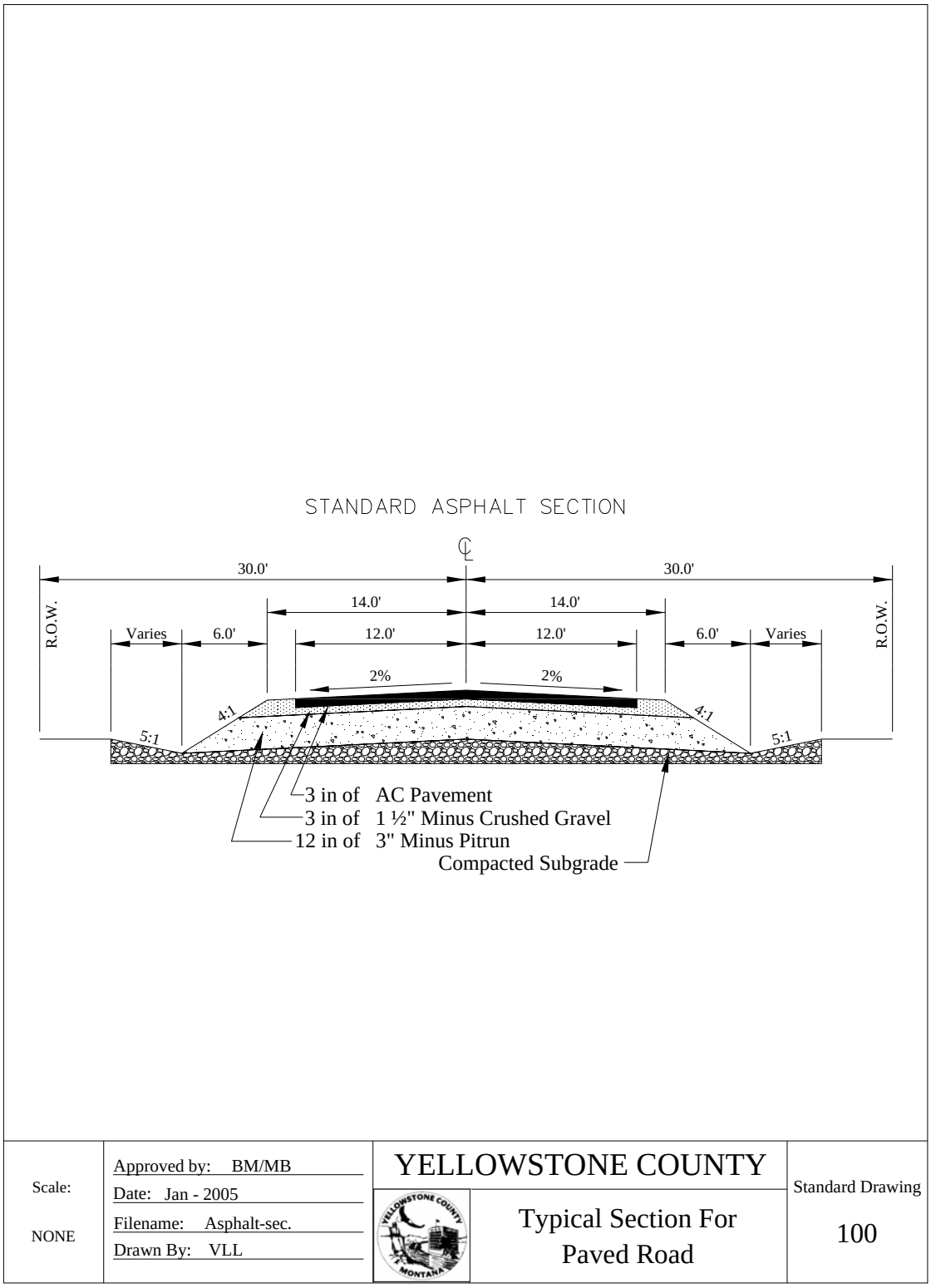
STANDARD ASPHALT SECTION
30.0'
30.0'
14.0'
14.0'
R.O.W.
Varies
6.0'
12.0'
12.0'
6.0'
Varies
R.O.W.
2%
2%
4:1
4:1
5:1
5:1
3 in of AC Pavement
3 in of 1 ½" Minus Crushed Gravel
12 in of 3" Minus Pitrun
Compacted Subgrade
Scale:
NONE
Approved by: BM/MB
Date: Jan - 2005
Filename: Asphalt-sec.
Drawn By: VLL
YELLOWSTONE COUNTY
Typical Section For Paved Road
Standard Drawing
100

Figure 4.6.C.3.

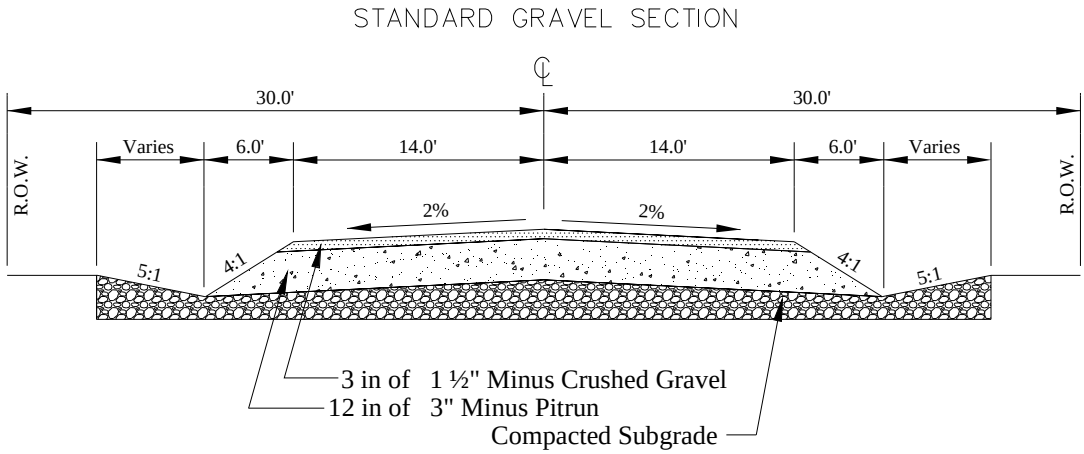

Scale: NONE	Approved by: BM/MB Date: Jan - 2005 Filename: Gravel-sec. Drawn By: VLL	YELLOWSTONE COUNTY Typical Section For Gravel Road	Standard Drawing 110

Figure 4.6.C.4. Turn-around standards for Roads

T - TYPE

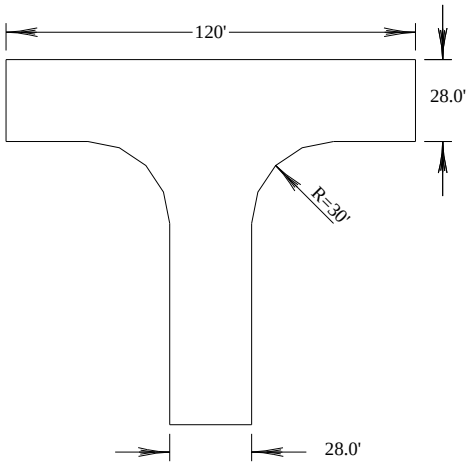

BRANCH

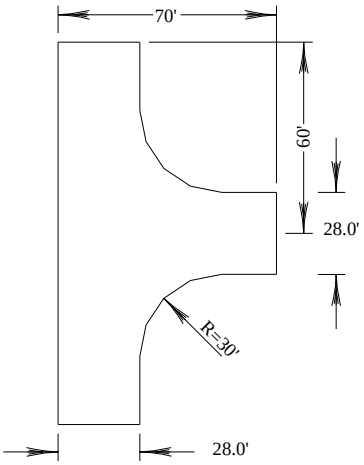

CIRCULAR

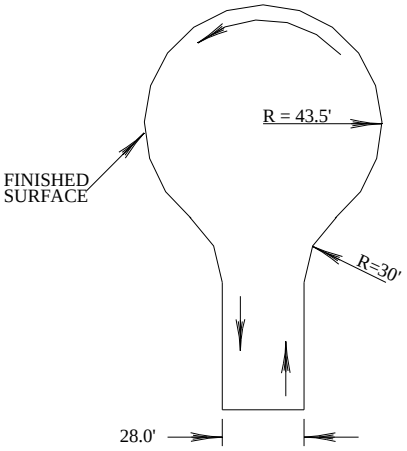

Scale: NONE	Approved By: BM/MB Date: May 2006 Filename: CDS and Turnaround Drawn By: VLL	YELLOWSTONE COUNTY CUL-DE-SAC & TURNAROUND STANDARDS	Standard Drawing 130

D. **Multi-Use Trails, General:** When applicable, subdivisions shall be reviewed for consistency with the Heritage Trail Plan to provide multi-use trail routes for safe, convenient non-motorized transportation routes throughout the County.

1. It is recommended that all new subdivisions provide a 20-foot-wide multi-use trail easement across the property if the Heritage Trail Plan indicates that a proposed multi-use trail route crosses the subdivision property.

2. If the Heritage Trail Plan indicates that a proposed trail route crosses the subdivision property, and a segment of the corridor has already been provided on adjacent property, then it is recommended that the subdivision provide a 20-foot wide trail easement to connect to the trail segments at the property lines to provide for a continuous trail route.

3. When parkland dedication is required and the Heritage Trail Plan indicates that a proposed trail route crosses the subdivision property, dedication of linear park land including a trail easement may be considered as all, or a portion of, the required parkland dedication (See Sections 10.2 and 10.4 of these Regulations).

Figure 4.6.C.5. Turn-around Standards for Access Driveways

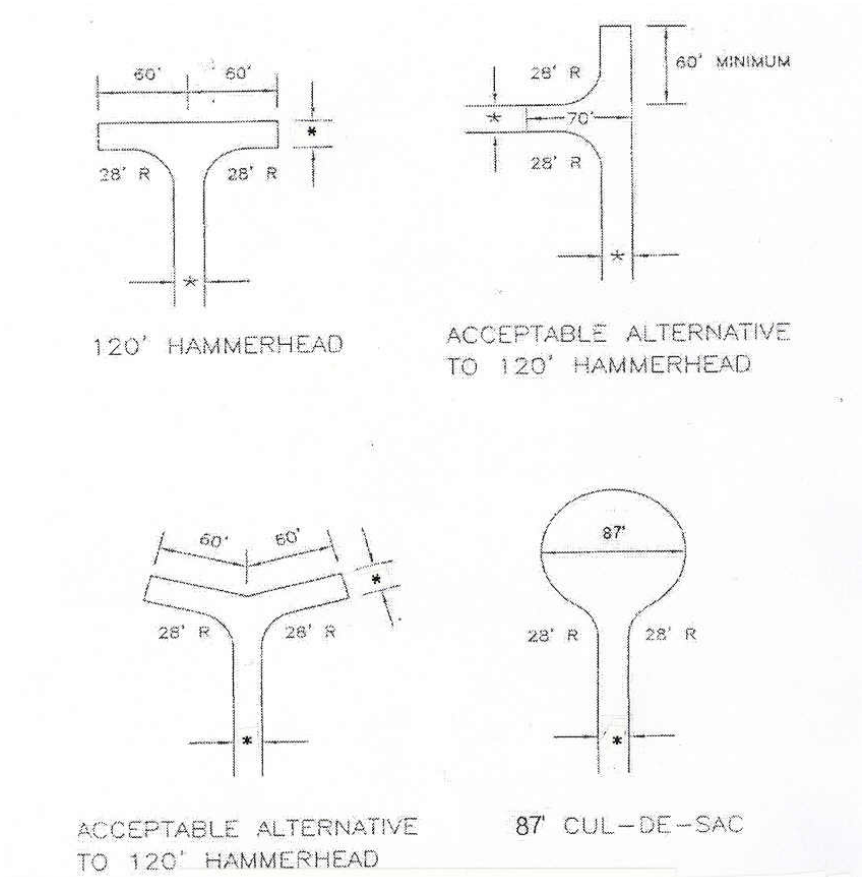

* = Twenty (20) feet minimum
unless otherwise required.

Section 4.7 Storm Drainage Facilities.

A. **General:** Facilities and design for storm water drainage shall be provided in accordance with standards set by the Montana Department of Environmental Quality (MDEQ). The subdivider shall provide a storm water collection and conveyance system which is designed and constructed in accordance with MDEQ standards and which may be connected to an existing storm drainage system. If there is no existing storm drainage system in the area or if the existing system has insufficient capacity to carry the additional discharge, the subdivider shall provide an onsite area for retention or detention with controlled outlet capacity, if needed. Such on-site retention or detention and controlled outlet shall be utilized only if specifically approved by the MDEQ.

B. **Drainage Discharge:** Discharge of storm drainage is subject to the following:

1. Storm drain systems shall not discharge into sanitary sewer facilities.

2. Storm drain systems shall not discharge into agricultural water user's facilities without the written permission of the appropriate irrigation district.

3. Stormwater detention or retention ponds may be located within public park land at the discretion of the County Park Board. Such areas shall not count toward the park land dedication requirement unless they are approved by the County Park Board, designed to serve as an amenity to the park, and fit into the planned uses and improvements to the park (See Chapter 10 of these Regulations).

C. **Easements:** Easements may be required between lots and along public rights-of-way to manage storm drainage in subdivisions.

D. **Location of Facilities:** If any onsite retention or detention facility is used it shall be included as part of the lots, public right-of-way or parkland. No separate parcels shall be created exclusively for such facilities.

E. **System Maintenance:** If any onsite retention or detention facilities are utilized, unless otherwise provided, a special maintenance district shall be created prior to filing the final subdivision plat in order to provide funds for the maintenance of such facilities.

F. **Future Improvements:** If any onsite retention or detention facility is used, a waiver of right to protest the creation of a future storm drain system special improvement district shall be executed by the subdivider and recorded and filed with the final plat.

G. **Municipal Separate Storm Sewer Stystem (MS4):** Yellowstone County is part of a program to reduce pollutants in storm water runoff from construction activites that result in a land disturbance of greater than or equal to one (1) acre, within the MS4 boundary and outside the city limits in Billings. A map of the MS4 boundary is available in the Public Works Department. Development inside the MS4 boundary may be required to follow the procedures described below.

Any person or person that perform(s) construction activities within the MS4 boundary that result in a land disturbance of greater than or equal to one (1) acre, shall obtain a permit or permission from MDEQ and abide by all of their rules, requirements, and conditions. This shall include construction plan submittal to MDEQ. A copy of the submittal, along with any responses or replies from MDDEQ shall also be submitted to the Yellowstone County Public Works Department.

Section 4.8 Sanitary Sewer System.

A. If the subdivision is within the service area of a public sanitary sewer system, the subdivider shall install complete sanitary sewer system facilities in accordance with the requirements of the sewer district involved and the Montana Department of Environmental Quality (MDEQ).

   The subdivider shall submit an application for extension of sanitary sewer services and plans and specifications for the proposed facilities to the sewer district involved and to the Montana Department of Environmental Quality (MDEQ) and shall obtain necessary approvals prior to final plat approval.

B. If any boundary of the subdivision is within 500 feet of a public sanitary sewer system, the subdivider must connect to the sewer district and install sanitary sewer system facilities.

   The governing body may grant a waiver of the requirement to connect to a public system if the subdivider demonstrates that connection to the public system is physically or economically impractical, or if the district or utility refuses to provide service. For purposes of this Section, a connection is economically practical if the cost is less than or equal to three times the cost of installation of an approvable system on the site.

C. Where individual septic systems are proposed, the systems must, at a minimum, meet the standards set forth in Montana Administrative Rules, Title 17, Chapter 36 (Subdivisions/Onsite Subsurface Wastewater Treatment), and obtain approval by the Montana Department of Environmental Quality and/or the Yellowstone County Environmental Health Department, as required below.

   1. For lots less than 20 acres, MDEQ approval shall be obtained prior to the submittal of the final plat application.

   2. For lots equal to or greater than 20 acres, Yellowstone City-County Health Department approval is required prior to the submittal of the final plat application.

D. Where the subdivision may reasonable expect sanitary sewer service from the City of Billings public sewer system or other public sanitary sewer system at a future date, as determined by the Yellowstone County Board of Planning, a waiver of right to protest the creation of a future sanitary sewer system special improvement district shall be executed by the subdivider and filed and recorded with the final plat.

Section 4.9 Water Supply System.

A. If the subdivision is within the service area of a public water supply system, the subdivider shall install complete water system facilities in accordance with the requirements of the water district involved and the Montana Department of Environmental Quality (MDEQ).

   The subdivider shall submit an application for extension of water services and plans and specifications for the proposed facilities to the water district involved and to the Montana Department of Environmental Quality (MDEQ) and shall obtain necessary approvals prior to final plat approval.

B. If any boundary of the subdivision is within 500 feet of a public water supply system, the subdivider must connect to the water district and install water supply system facilities.

   The governing body may grant a variance from the requirement to connect to a public system if the subdivider demonstrates that connection to the public system is physically or economically impractical, or if the district or utility refuses to provide service. For purposes of this Section, a connection is economically practical if the cost is less than or equal to three times the cost of installation of an approvable system on the site.

C. Where individual water supply systems are proposed, the systems must, at a minimum, meet the standards set forth in Montana Administrative Rules, Title 17, Chapter 36 (Subdivisions/Onsite Subsurface Wastewater Treatment), and obtain approval by the Montana Department of Environmental Quality and/or the Yellowstone County Environmental Health Department, as required below.

   1. For lots less than 20 acres, MDEQ approval shall be obtained prior to the submittal of the final plat application.
   2. For lots equal to or greater than 20 acres, Yellowstone City-County Health Department approval is required prior to the submittal of the final plat application.

D. Where the subdivision may reasonably expect water supply service from the City of Billings public water system or other public water system at a future date, as determined by the Yellowstone County Board of Planning, a waiver of right to protest the creation of a future water system special improvement district shall be executed by the subdivider and filed and recorded with the final plat.

Section 4.10 Solid Waste Disposal.

A. The subdivision shall satisfy the solid waste disposal standards set forth in Montana Administrative Rules, Title 17, Chapter 36 (Subdivisions/Onsite Subsurface Wastewater Treatment). Approval of the final plat will be contingent on receiving solid waste disposal approval either from MDEQ or the City-County Environmental Health Department, as required below.

   1. For lots less than 20 acres, MDEQ approval shall be obtained prior to the submission of the final plat application.

2. For lots equal to or greater than 20 acres, Yellowstone City-County Health Department approval is required prior to the submission of the final plat application.

B. Sufficient solid waste collection sites shall be provided for subdivisions within industrial or commercial uses. Said collection sites shall contain adequate capacity to accommodate the waste from the development. Locations shall be submitted with the preliminary plat for review and approval.

Section 4.11 Utilities.

A. All new utilities serving the subdivision including electricity, cable television, and telephone shall be placed underground, with the exception of fire hydrants, cable closures, alignment markers, etc. Easements for utilities shall be clearly indicated on the plat.

1. Easements across lots or centered on common rear or common side lot lines shall be provided for public utilities and shall be at least 16 feet wide; easements located along perimeter lot lines shall be at least 8 feet in width. The width of an easement may vary depending upon the utility company serving the subdivision.

2. Utility facilities shall be designed by utility firms in cooperation with the subdivider, subject to applicable laws and rules and regulations of any appropriate regulatory authority having jurisdiction over such facilities.

B. Where a subdivision is proposed partially or wholly within an airport influence area and noise zone, as defined in Article 5-400, Billings Montana City Code, or as identified by the City of Laurel, a perpetual air rights easement shall be executed. Maps depicting the various zones can be found on file with the County Planning Board.

Section 4.12 Watercourse and Irrigation Easements. (76-3-504(1)(j), (k), (l), MCA)

A. **Easements for irrigation facilities within the subdivision**: Easements are required to be shown on the face of the preliminary and final plats for all drainage ways, irrigation canals/ditches and their laterals, and below-ground pipelines that traverse the property to be subdivided, except as noted in Section 4.12.B., below. In addition, an easement document shall be recorded with the final plat. The easements provided shall meet the following standards:

1. Easements shall be provided in locations of appropriate topography and sufficient width to allow the physical placement and unobstructed maintenance of open ditches or below ground pipelines for the delivery of water for irrigation to persons and land legally entitled to the water under an appropriated water right or permit of an irrigation district or other private or public entity formed to provide for the use of the water right on the subdivision lots;
2. Easements of a sufficient width to allow for construction, repair, maintenance, and inspection of the ditch shall be provided. The easement width shall be based on the policy of the appropriate irrigation district; and

3. The easement document shall prohibit the placement of structures or the planting of vegetation other than grass within the ditch easement without the written permission of the water users.

B. **Exclusion of easement requirements for irrigation within the subdivision:** The subdivider need not establish irrigation easements as provided in Section 4.12.A. above if one of the following is met:

1. The average lot size in the proposed subdivision will be one (1) acre or less and the subdivider provides for disclosure, in a manner acceptable to the governing body, notifying potential buyers that lots within the subdivision are classified as irrigated land and may continue to be assessed for irrigation water delivery even though the water may not be deliverable to the lots; or

2. The water rights are removed from the property being subdivided or evidence is provided by the subdivider that the appropriate legal or administrative process has been initiated to remove the water rights from the land within the subdivision. Furthermore, the fact the water rights have been or will be removed from the land within the subdivision shall be denoted on the preliminary plat. If the removal of water rights has not been completed at the time the final plat is filed, the subdivider shall provide written notification to prospective buyers of the subdivider's intention to remove the water right and shall document that intent, when applicable, in agreements and legal documents for related sales transactions.

C. **Easements through the subdivision for the benefit of downstream water users:** Easements are required to be shown on the face of the preliminary and final plats for all drainage ways, irrigation canals/ditches and their laterals, and below-ground pipelines on the property being subdivided that are necessary to convey water through the subdivision to lands adjacent to or beyond the subdivision boundaries in quantities and in a manner that is consistent with historic and legal rights. In addition, an easement document shall be recorded with the final plat. The easements provided shall meet the following standards:

1. Easements shall be provided in locations of appropriate topography and sufficient width to allow the physical placement and unobstructed maintenance of open ditches or below ground pipelines for the delivery of water for irrigation to persons and land legally entitled to the water under an appropriated water right or permit of an irrigation district or other private or public entity formed to provide for the use of the water right on the subdivision lots;

2. Easements of a sufficient width to allow for construction, repair, maintenance, and inspection of the ditch shall be provided. The easement width shall be based on the policy of the appropriate irrigation district; and
3. The easement document shall prohibit the placement of structures or the planting of vegetation other than grass within the ditch easement without the written permission of the water users.

D. **Additional Provisions:**

1. The realignment or relocation of active irrigation ditches or pipelines is discouraged when said facilities are located outside of public right-of-way. If an irrigation facility is proposed to be realigned or relocated, the developer shall receive written permission of the appropriate irrigation district and/or water user and the subdivider's Professional Engineer shall certify prior to final plat approval that the water entering and exiting the realigned or relocated irrigation facility is the same quality and quantity that entered or exited the facility prior to realignment or relocation.

2. New storm water generated from a subdivision shall not be discharged into an irrigation facility unless the subdivider receives written approval from the appropriate agricultural water user facility prior to final plat approval.

Section 4.13 Disposition of Water Rights. (76-3-504(j)(i), MCA)

If a subdivision will create lots averaging less than five acres in size, the subdivider shall submit evidence with the final plat indicating that either A. *and* B., below, or C., below, has been provided:

A. **Reservation and transfer of water rights:** The subdivider shall reserve all or a portion of the water rights on the land to be subdivided and transfer these water rights to a single entity for use by landowners within the subdivision who have a legal right to the water. Any remaining surface water rights from the land shall be reserved and severed; and

B. **Establish landowner's water use agreement:** If the land to be subdivided is subject to a contract or interest in a public or private entity formed to provide for the use of a water right on the subdivision lots, the subdivider shall establish a landowner's water use agreement administered through a single entity. This agreement must specify how the water rights will be administered and describe the rights and responsibilities of landowners within the subdivision who have a legal right and access to the water; or

C. **All rights reserved and severed:** All surface water rights shall be reserved and severed from the land proposed for subdivision.

Section 4.14 Fire Protection Requirements.

To ensure a reasonable level of fire protection and life-safety for the public and firefighters, an approved water supply capable of the required water flow for fire protection shall be provided in accordance with this Section and the applicable fire code to all premises upon which facilities, buildings, or portions of buildings are hereafter constructed or moved into the jurisdiction.

A. **Definitions.**
Exposure: Any structure more than 200 square feet in size.

Dry Hydrant System: A permanent piping system with an underground static water supply which provides year round frost free access to a water source other than a pressurized municipal water source.
Residential dwellings: Residential occupancies where the occupants are primarily

permanent in nature and where buildings do not contain more than two (2) dwelling units, or child care facilities that provide accommodations for five (5) or fewer persons of any age for less than 24 hours. This shall include buildings arranged for occupancy as residential care/assisted living facilities including more than five (5) but not more than 16 occupants, excluding staff.

Approved: Acceptable to the fire department having jurisdiction.

Fire Department having jurisdiction: Fire Department or Fire District serving the area in which the subdivision is located.

B. **Minor Subdivisions:** For all minor subdivisions creating three (3) to five (5) lots, the subdivider shall provide a minimum of one (1) of the following mechanisms for fire suppression:

1. A pressurized fire hydrant system meeting the flow requirements of the applicable Fire Code and National Fire Protection Association (NFPA) 1142.

2. An approved, single, minimum ten thousand (10,000) gallon underground water storage tank with approved dry hydrant type fittings located not more than one-half (1/2) road mile from the furthest structure in the subdivision. If an approved existing underground water storage tank is located within one-half (1/2) road mile from the furthest structure of the proposed subdivision, it may be used to meet this requirement. In either case, the dry hydrant shall be constructed to the standards set forth by this Section.

Alternative methods shall be reviewed by the fire department having jurisdiction with recommendations for approval made to the Board of County Commissioners.

C. **Major, Commercial, and Subsequent Minor Subdivisions.** The subdivider shall provide a minimum of one of the following mechanisms for fire suppression:

1. A pressurized fire hydrant system meeting the flow requirements of the applicable Fire Code and NFPA 1142.

2. An approved, single, minimum thirty thousand (30,000) gallon underground water storage tank with approved dry hydrant type fittings located not more than one-half (1/2) road mile from the furthest structure in the subdivision. If an approved existing underground water storage tank is located within one-half (1/2) road mile from the furthest structure of the proposed subdivision, it may be used to meet this requirement. In either case, the dry hydrant shall be constructed to the standards set forth by this Section.

Alternative methods shall be reviewed by the fire department having jurisdiction with recommendations for approval made to the Board of County Commissioners.

D. **Proportionate Reimbursement for the Joint Use of a Dry Hydrant System:**

1. Proportionate Reimbursement for the joint use of a dry hydrant system: If subsequent subdivisions will be served by an existing water supply site, the Board of County Commissioner shall include reimbursement of the original water supply site improvement costs as a condition of preliminary approval of the subsequent subdivision. The reimbursement shall be in effect for a period of 15 years from the date of approval of the original subdivision. The proportionate reimbursement shall be determine based on the ratio of the number of lots in the subsequent subdivision to the total lots served by the fill site multiplied by the total cost of the water supply improvement. When the total cost of the fill site has been reimbursed, subsequent subdivisions shall not be subject to the requirement.

2. Reimbursement qualifications: The original subdivider shall forward documentation of the total costs of the water supply improvement to the County Finance Department within 60 days of completion of the improvement. Subsequent subdividers shall make their payment to the Finance Department, with notification to the Planning Department. The Finance Department shall then forward the funds within 120 days to the organization or individuals who are funding the dry hydrant system maintenance.

E. **Dry Hydrant Specifications.** If the dry hydrant option for fire suppression is utilized, the hydrant shall be constructed to the following standards:

1. All dry hydrant systems shall be designed and constructed to provide a minimum flow of one thousand (1,000) gallons per minute (gpm) (3780 L/min) at draft.

2. Dry hydrants shall have a minimum clearance of twenty (20) feet (6.6 m) on each side and be located a minimum of one hundred (100) feet (30 m) from any structure. Approved pullouts or other design features shall be constructed to ensure that highway or road traffic shall not be impaired during use of the dry hydrant.

3. Dry hydrants shall be located to be accessible under all weather conditions.

4. The water container shall be a clean fiberglass or concrete tank, approved by the Fire Department having jurisdiction.

5. To ensure safety of design, functionality, installation, maintenance, and proper appropriation of financial resources, the Fire Department having jurisdiction shall approve all aspects of tank location, construction design, type of materials, pipe, and system fittings.

6. The location of all dry hydrant systems shall be shown on the face of the final plat and be labeled to identify the size of the tank in gallons, i.e.: “30,000 gallon underground water storage tank/dry hydrant system” or “10,000 gallon underground water storage tank/dry hydrant system”. One copy of this plat shall be forwarded to the County GIS Department.

F. **Water supply maintenance.** The subdivider shall establish a Rural Special Improvement District (RSID) prior to final plat approval that ensures the continual operation and maintenance of the water supply system. If the Fire Department having jurisdiction determines that the water supply system is not being adequately maintained, the Fire Department may maintain or repair the system. The cost of such maintenance may be levied against the real property within the subdivision and may be foreclosed in any manner allowed by law.

All underground water supply tanks shall be available for use by any Fire Department responding to any fire within the jurisdiction where the fire is occurring.

G. **Emergency Secondary Access Roads:** In the event that an emergency secondary access road is approved as a means of providing a second access to a subdivision, as required by Section 4.6.B.5 of these Regulations, it shall be built to the following standards:

1. Emergency access roads shall be designed to a minimum unobstructed surface width of not less than 20 feet and shall be constructed to adequately support a 40-ton vehicle with a surface so as to provide all weather driving capabilities. The road shall be constructed to County standards (see Figure 4.14.F.1). Where requested by the Fire Department having jurisdiction, gates or other approved barricades shall be required at either end of the road to restrict through traffic. A sign shall be fixed to each gate in a conspicuous manner. The sign shall read "EMERGENCY ACCESS ONLY" using black letters not less than 2 inches wide and 6 inches high on a white retro reflective background.

2. Prior to construction, a cross-sectional design of the road including location, section, surfacing, and drainage, and design of gates or barriers shall be submitted to and approved by the Fire Department having jurisdiction and an Engineer licensed in the State of Montana. The storm drain design shall accommodate runoff during a 10 year storm event to ensure that there is no blockage of the roadway in the event of an emergency. The drainage shall not encroach into the travel way.

3. Emergency access roads will be assigned a name by the Fire Department having jurisdiction. In order to ensure the roads are entered into and reflected on the County GIS mapping system, the road shall be shown on the plat along with the name assigned to the road. Emergency access roads will not have conventional street signs identifying them by the assigned name.

   One set of final plans showing corrections/revisions after review and approval shall be submitted to the Fire Department and one set of final plans shall be provided to County GIS to ensure that the emergency access road and road name are entered into the GIS mapping system.

Figure 4.14.F.1

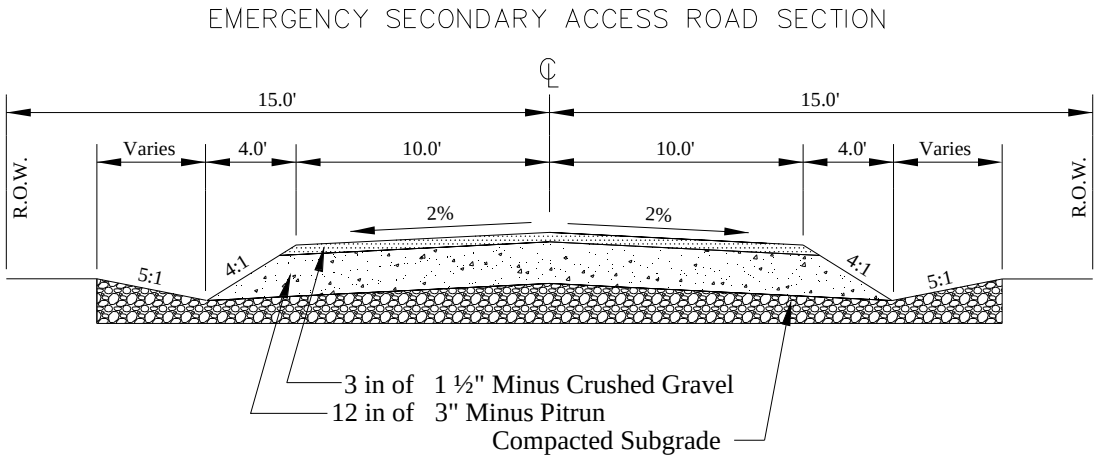

Scale: NONE	Approved by: BM/MB Date: May - 2006 Filename: Emer Secondary Accrd Drawn By: VLL	YELLOWSTONE COUNTY Typical Section For Emergency Secondary Access Road	Standard Drawing 120

Section 4.15 Noxious Weed Control.

In order to comply with the Montana County Weed Control Act, Title 7, Chapter 22, Part 21, MCA, all proposed County subdivisions must enter into a weed management plan agreement with the Yellowstone County Weed Board. Approval of the final plat will be contingent on an approved weed management plan on file with the Yellowstone County Weed Control Department.

A. County subdivision weed management plans require completion of application forms obtained from the Yellowstone County Weed Control Department, a site map that will allow for inspection of the proposed development, and payment of the inspection fee prior to performance of the required inspection.

B. Mitigation of any identified existing noxious weed species will be required as well as planned re-vegetation of any and all disturbed areas within the proposed subdivision.

Section 4.16 Flood Hazard Evaluation.

If any portion of a proposed subdivision is within the floodway of a flood of one hundred (100) year frequency as defined by Title 75, Chapter 5, MCA and the Federal Emergency Management Agency (FEMA), or deemed subject to flooding by the County, or if any portion of a proposed subdivision is within two thousand (2,000) horizontal feet and less than twenty (20) vertical feet of a live stream draining an area of twenty-five (25) square miles or more, the flood hazard evaluation criteria found in Appendix N shall be applied, as appropriate.

Chapter 5.0 GUARANTEE OF PUBLIC IMPROVEMENTS

Section 5.1 Subdivision Improvements Agreement.

Prior to receiving approval of the final plat by the governing body, the subdivider shall have installed all of the required improvements as stipulated in these Regulations (76-3-507(1), MCA), or shall, prior to final plat approval, enter into a written subdivision improvements agreement (SIA) with the governing body guaranteeing the construction and installation of all required improvements in conformance with all policies, standards and resolutions adopted by the County. The agreement shall stipulate, among other things, which type of security arrangements acceptable to the governing body the subdivider elects to use, the time schedule acceptable to the County, the subdivider's plans for accomplishing the required improvements and an agreement that the subdivider shall guarantee all improvements for a period of one (1) year from the date of acceptance by the County. (See Appendix K for SIA Template)

The County may require the subdivider in certain situations to contribute funds for the construction of future public improvements including, but not limited to public roads, sewer lines, water supply lines, and storm drains to a subdivision (76-3-510, MCA). For example, if a subdivider constructs a subdivision that will increase the traffic on a current gravel road outside of the subdivision to a level that will require the future paving of that road, the County may require the subdivider to contribute his pro rata share of funds for the future paving of the road. The required funds would cover future improvements which may become necessary given the current subdivision development and further development. Any funds the County receives for the construction of future public improvements will be placed in a trust account solely for the construction of the improvements for which the County collected the funds.

Section 5.2 Security Guarantee.

The subdivider shall provide a monetary security guarantee from the following listed methods in the amount of one hundred twenty-five percent (125%) of the estimated total cost or actual construction contract amount of installing all required improvements including engineering and administration fees, as estimated by a Professional Engineer licensed in the State of Montana and reviewed by the Public Works Department, of installing all required improvements.

A. **Bond.** The subdivider shall provide a surety bond to guarantee the funds to complete improvements, subject to any requirements of the bonding company. The bond shall be payable to the County and shall remain in effect until the improvements have been completed and accepted by the County. The subdivider shall bear all costs associated with the provision of the guarantee.

   The subdivider shall provide the County with either verification that the improvements have been constructed or a new bond forty-five (45) days prior to the expiration of the bond. If the subdivider fails to provide either verification or a new bond, the County will begin the process to collect on the bond. If the subdivider provides a new bond, it shall be increased in value, by the larger of the following:

1. five percent (5%), or

2. one hundred twenty-five percent (125%) of the updated estimated total cost of installing all required improvements including engineering and administration fees, as estimated by a Professional Engineer licensed in the State of Montana and reviewed by the Public Works Department.

B. **Irrevocable letter of credit.** The subdivider shall provide, from a financial institution or other reputable institution subject to the approval of the Board of County Commissioners or designee, an irrevocable letter of credit (See Appendix L for Letter of Credit Template). This letter shall be deposited with the County and shall certify the following:

1. That the creditor does guarantee funds of the required amounts, as estimated by the subdivider's Professional Engineer and reviewed by the Public Works Department, for completing all required improvements; and

2. That, in the case that the subdivider fails to complete the specified improvements within the required time period, the creditor shall pay to the County immediately, and without further action, such funds as are necessary to finance the completion of those improvements, up to the limit of credit stated in the letter; and

3. That the letter of credit may not be withdrawn, or reduced in amount, until released by the Board of County Commissioners or designee; and

4. That the letter of credit shall be renewed from year to year until such time the improvements are completed.

The subdivider shall provide the County with either verification that the improvements have been constructed or a new irrevocable letter of credit forty-five (45) days prior to the expiration of the irrevocable letter of credit. If the subdivider fails to provide either verification or a new irrevocable letter of credit, the County will begin the process to collect on the irrevocable letter of credit. If the subdivider provides a new irrevocable letter of credit, it shall be increased in value, by the larger of the following:

1. five percent (5%), or

2. one hundred twenty-five percent (125%) of the updated estimated total cost of installing all required improvements including engineering and administration fees, as estimated by a Professional Engineer licensed in the State of Montana and reviewed by the Public Works Department.

C. **Sequential development.** Where a subdivision is to be developed in phases, a phasing plan shall be prepared by the subdivider, and reviewed and approved by the

Board of County Commissioners with the preliminary plat. The phasing plan shall be included in the SIA and shall describe which lots are included in each phase, what improvements shall be completed with each phase, and the approximate completion date of each phase. Improvements included in the first phase shall be constructed or guaranteed using one of the acceptable monetary security guarantees prior to final plat approval by the Board of County Commissioners. Lots within subsequent phases shall be restricted from being transferred or developed. A "Restrictions on Transfers and Conveyances" contract shall be entered into for subsequent phases by the subdivider and the Board of County Commissioners and shall be filed with the final plat documents with the Clerk & Recorder (See Appendix M for Restrictions of Transfers and Conveyances Template). A release on the restrictions on transfers and conveyances may be filed with the Clerk & Recorder only after the necessary improvements for each particular phase are constructed, reviewed and accepted by the County, or guaranteed using one of the acceptable monetary security guarantees.

D. **Other.** Any other method that may be acceptable to the Planning Board and the Board of County Commissioners.

Section 5.3 Reduction Of Guarantees.

In those cases where improvement guarantees have been made by one of the methods in Section 5.2.A., B., or D., the amount of the guarantee may be reduced upon installation and acceptance by the County of the required improvements. The amount of the reduction shall not exceed the percentage that the accepted improvements made up of all originally required improvements.

Section 5.4 Release Of Guarantee.

Upon completion of required improvements by the subdivider and acceptance of them by the County, all in conformance with this Chapter, the County shall authorize the release of any remaining portion of the improvement guarantee up to 90% of the original amount. The remaining 10% will be released after any deficiencies are corrected after the one year warranty inspection. Such request and release shall both be in writing.

Chapter 6.0 DEVELOPMENTS PROVIDING MULIPLE SPACES FOR RENT OR LEASE FOR RECREATIONAL VEHICLES, MOBILE HOMES, AND MANUFACTURED HOMES

Section 6.1 General.

A. **Definition.** A development providing multiple spaces for rent or lease for Recreational Vehicles (RVs), mobile, or manufactured homes is created when any portion of a parcel is rented or leased for the purposes of situating a temproary or permanent RV, mobile, or manufactured home for residential or commercial use owned by the renter or lessee. The rented/leased land is owned as one parcel under single ownership, which can include a number of persons owning the property in common. These developments are commonly known as mobile home parks, manufactured home parks and recreational vehicle parks.

B. **Review & approval required.** Mobile home parks, manufactured home parks, and RV parks must be submitted for review and approval by the Board of County Commissioners before portions thereof may be rented or leased (76-3-504(s), MCA). Approval must be based on the criteria found in Chapter 3 of these Regulations.

The number of spaces available for rent or lease shall determine the level of review under Chapter 3 (i.e. major, minor, or expedited) as follows:

a. Zero to two (0-2) rental/lease spaces with water and/or wastewater services, meeting all other criteria found in Section 3.5.A. of these regulations shall be reviewed as a subdivision qualifying for expedited review under Section 3.5.

b. Zero to two (0-2) rental/lease spaces with water and/or wastewater services not meeting one or more of the criteria found in Section 3.5.A. of these regulations shall be reviewed as a first minor subdivision under Section 3.3.

c. Three to five (3-5) rental/lease spaces with water and/or wastewater services shall be reviewed as a first minor subdivision under Section 3.3.

d. Six or more (6+) rental/lease spaces with water and/or wastewater services shall be reviewed as a major subdivision under Section 3.2.

C. **Zoning requirements.** Mobile home parks, manufactured home parks and RV parks within the zoning jurisdiction shall follow all applicable requirements outlined in the Unified Zoning Regulations.

Section 6.2 Review Procedures.

A. Submittal requirements.

1. Mobile home parks, manufactured home parks and RV parks require submittal of those requirements outlined in Chapter 3 of these Regulations except that the subdivider shall submit unsurveyed plans drawn to scale, rather than plats.

2. Supplementary materials: In addition to the submittal requirements outlined in Chapter 3, preliminary and final plans for mobile home parks, manufactured home parks and RV parks shall show the following:

   a. A layout of all spaces, buildings, or structures proposed for rent or lease.

   b. Location of common areas and facilities.

   c. Parks and/or recreation areas if required by Chapter 10 of these regulations.

   d. Landscaping plan if required by Section 6.3.E.2, below, and Section 27-1006, or Article 27-1100 of the Unified Zoning Code, when applicable.

   e. A Road Evaluation Study or Traffic Impact Study, if required by Section 4.6.C.4 of these regulations.

B. Final Approval. Mobile home parks, manufactured home parks and RV parks shall follow the applicable review procedures outlined in Chapter 3 of these Regulations. In lieu of a final plat, a final plan drawn to scale shall be submitted for approval by the Board of County Commissioners. The approved final plan shall be filed with the Yellowstone County Clerk & Recorder as an exhibit, not as a final plat.

Section 6.3 Mobile/Manufactured Home Park Development Requirements.

A. Mobile or Manufactured home spaces.

1. The number of allowed spaces is limited to what is approved on the final plan.

2. Mobile or manufactured home spaces must be arranged to permit the safe and practical placement and removal of manufactured homes.

3. All mobile or manufactured homes must be located a minimum of twenty (20) feet from all perimeter boundary lines.

4. The mobile or manufactured home pad must be located at least ten (10) feet from the street that serves it.

5. Location of space limits on the ground must be approximately the same as those shown on the approved plans. Precise surveying of space limits is not required either on the plans or on the ground.

6. The size of the mobile or manufactured home pad must be suitable for the general market to be served and must fit the dimensions of manufactured homes anticipated. At a minimum the pad should measure fourteen (14) feet wide and seventy (70) feet long. All pads shall be constructed of at least six (6) inches of gravel over a stabilized sub-base.

7. A minimum of two (2) off-street parking spaces (an area a minimum of 10x20 feet in size) must be provided on or adjacent to each mobile or manufactured home space. The driveway must be located to allow for convenient access to the manufactured home, and be a minimum of ten (10) feet wide.

8. One guest parking space must be provided for each ten (10) mobile or manufactured home spaces. Group parking may be provided.

B. Streets.

1. All streets within a mobile or manufactured home park or recreational vehicle park shall be private.

2. Private streets shall be designed to provide access to all sites. No site shall have vehicular access to a public street. The streets shall be laid out to discourage through traffic and intersections with public streets shall be kept to a minimum.

3. Streets shall be designed and built to meet current County standards following the requirements as found in Chapter 4 of these Regulations.

4. Curvilinear streets shall have no centerline curve with less than a one hundred (100) foot radius. At intersections the inside edge of the paved street shall have a minimum of a twenty (20) foot radius.

5. All streets shall intersect at an angle of ninety (90) degrees except where the subdivider can show just cause not to and with the approval of the Board of County Commissioners.

6. The layout near street intersections shall be such that a clear vision area is maintained. Stopping sight distance on curves shall be as required on subdivision streets.

7. All traffic control devices used shall comply with the current edition of the *Manual of Uniform Traffic Control Devices(MUTCD).* All roads serving the mobile or manufactured home park shall have road signs installed at intersections meeting MUTCD standards.

C. Fire protection.

1. All mobile or manufactured home parks shall be located within a local fire district or fire service area.

2. The mobile/manufactured home park shall provide an adequate water supply for fire suppression needs, following the requirements as found in Section 4.14 of these Regulations. The means for fire protection shall be subject to approval by the local fire district and the governing body.

D. Health standards/license requirement. In addition to the criteria of this Section, mobile or manufactured home parks must also meet the minimum standards of the Montana Department of Public Health and Human Services (MDPHHS) under Title 50, Chapter 52, MCA and the requirements of the Montana Department of Environmental Quality (MDEQ) under Title 50, Chapter 60, MCA. The Board of County Commissioners shall not grant final approval of a mobile or manufactured home and/or recreational vehicle park until the subdivider first obtains the applicable licenses and approvals for the facility from MDPHHS and MDEQ.

E. Additional provisions.

1. Mobile or manufactured home parks shall meet the parkland dedication requirements as outlined in Chapter 10 of these Regulations.

2. Mobile or manufactured home parks located adjacent to industrial, commercial or lower-density residential land uses shall provide screening such as fences or natural growth along the property boundary lines separating the community from such adjacent uses.

3. All mobile or manufactured home parks shall have a sign near the main entrance showing the park layout.

4. Centralized mail delivery shall be provided at one or more location within the park. Location and design of such group mail collection site(s) shall be reviewed and approved by the United States Postal Service.

5. It shall be unlawful to operate a mobile or manufactured home park without holding a valid license issued by the Montana State Department of Environmental Quality, to be renewed annually.

Section 6.4 Recreational Vehicle Park Development Requirements.

A. **Recreational vehicle spaces.**

1. Recreational vehicle spaces must be arranged to allow for the safe movement of traffic and access to spaces.

2. Recreational vehicles must be separated from each other and from other structures by at least fifteen (15) feet. Any accessory structures such as attached awnings must, for purposes of this separation requirement, be considered part of the recreational vehicle.

3. No recreational vehicle space may be located less than twenty (20) feet from any public street or highway right-of-way.

4. The density of a recreational vehicle park may not exceed twenty-five (25) recreational vehicle spaces per acre of gross site area.

B. **Streets.**

1. Roads within recreational vehicle parks must be designed to provide safe traffic circulation and parking.

2. Design of the streets within a recreational vehicle park shall follow those guidelines on street design for manufactured home parks above (Section 6.3.B)

C. **Additional standards.**

Recreation vehicle parks shall also follow the guidelines within the above sections: Section 6.3.C. **Fire protection**; Section 6.3.D. **Health standards/license requirement**; and Section 603.E. **Additional provisions.**

Section 6.5 Timing of Improvements.

A. The subdivider shall install all required improvements before renting or leasing any portion of the mobile home park, manufactured home park, or RV park. All street improvements shall be designed by and constructed under the supervision of a professional engineer, competent in civil engineering, licensed in the State of Montana. All improvements shall meet or exceed the right-of-way and construction standards for the type of street to be constructed found within these Regulations, the adopted transportation plan, and adopted policies of the County Public Works Department.

B. **Plans and Specifications.** Plans and specifications for all private streets shall be prepared by a professional engineer, competent in civil engineering, licensed in the State of Montana. A complete set of plans and specifications certified with the responsible Professional Engineer's embossed seal shall be provided to the County Public Works Department prior to initiation of any street improvement construction. The subdivider shall provide professional engineering services for construction inspections, and post-construction certifications. Record drawings shall be submitted to the County Public Works Department upon completion of construction.

Post Construction Certifications shall include, but not be limited to, the following:

1. Compaction test results;

2. Certification that all required improvements are complete;
3. Certification that the subdivider knows of no defects from any cause in those improvements;
4. Certification that these improvements are free and clear of any encumbrance or lien;
5. The method by which the one year guarantee is to be provided;
6. A schedule of actual construction costs shall be filed with the Public Works Department.

C. If the subdivider seeks approval of the final plan prior to the installation and completion of all required improvements, the subdivider shall enter into a written agreement with the Board of County Commissioners guaranteeing the construction and installation of all required improvements. This agreement shall specify which type of security arrangements the subdivider elects to use and the time schedule proposed for accomplishing the required improvements. Acceptable monetary security guarantees are described in Chapter 5 of these Regulations.

Chapter 7.0 CLUSTER DEVELOPMENTS AND PLANNED NEIGHBORHOOD DEVELOPMENTS. (MCA 76-3-509)

Section 7.1 Purpose.

The purpose of this Chapter is to promote maximum flexibility in the design of new developments within Yellowstone County and to encourage innovation within a framework of timely, efficient and flexible design review. Developments that utilize innovative, progressive planning and site design techniques and methods to allow a mixture of land uses, densities, setbacks, and building heights are encouraged. Cluster developments are encouraged where community resources are present and desirable for protection or preservation. Those areas include but are not limited to wildlife habitat, river and stream corridors, wetlands, historical or archeological sites or prime agricultural lands. Planned Neighborhood Developments are encouraged where the proposed development is in excess of twenty acres and diversity in land use is desirable.

Section 7.2 Definitions.

For the purposes of this Chapter the following definitions shall apply:

Cluster Development: A cluster development is a subdivision creating five (5) or more lots clustered in a group that is designed to concentrate building sites on smaller lots in order to reduce capital and maintenance costs for infrastructure through the use of concentrated public services and utilities, while allowing other lands to remain undeveloped. A minimum of 30% of the area within the subdivision shall be reserved for open space owned by common ownership (76-3-103(2), MCA).

Maximum Density Calculation: The maximum number of residential dwelling units is calculated by dividing the gross square footage of the cluster development area (including any open space area) by the required lot area in the underlying zoning district. In cases where lots are not zoned, the maximum density shall be calculated by dividing the gross area of the property by the minimum lot area to meet the Montana Department of Environmental Quality (MDEQ) standards.

Master Plan: A master plan is a site plan for a Planned Neighborhood Development that shows lots, blocks, streets, alleys and areas for various land uses including open space within the development. The master plan shall be part of the subdivision approval and any significant change to such master plan shall be considered an amended subdivision.

Planned Neighborhood Development (PND): A Planned Neighborhood Development (PND) is a subdivision consisting of a planned mixture of land uses such as residential clusters, industrial parks, shopping centers, and/or office building parks built in a prearranged relationship to each other and having open space and community facilities in common ownership or use (76-3-103(10), MCA).

Section 7.3 Cluster Development General Requirements.

A. Cluster development may be applied to any residential subdivision of five (5) or more lots. The subdivision shall generally conform to the Growth Policy and the underlying zoning district(s) although the lots may be smaller in area than required in the underlying zoning district.

B. The maximum size of any developed parcel or lot within a cluster development is 175,000 square feet.

C. A minimum of 30% of the total area within the subdivision shall remain undeveloped in a cluster development. The undeveloped parcel(s) must be protected in perpetuity to prohibit further division of the parcel. (See Section 7.8)

D. Cluster developments are exempt from the review criteria in Section 3.2.H. of these Regulations (76-3-509(e)(ii), MCA).

E. Cluster developments are exempt from the parkland dedication requirements in Chapter 10 in so far as the cluster development meets or exceeds the parkland dedication requirements of Section 10.2 of these Regulations.

F. Cluster developments shall comply with all other requirements of these Regulations.

Section 7.4 Design Standards and Applications for Cluster Developments.

A. The Cluster Development subdivision shall follow all applicable review procedures, as outlined in Chapter 3 of these Regulations.

B. **Site Analysis Map.** If an environmental assessment is required as part of the preliminary plat application it should include the following information on a site analysis map:

1. Property boundaries;
2. All streams, rivers, lakes, wetlands and other hydrologic features;
3. Topographic contours with a minimum of 5-foot intervals; where lots are proposed on slopes 10% or less, contours must be shown at 2-foot intervals.
4. All proposed open space areas;
5. General vegetation characteristics;
6. General soil types;
7. The planned location of protected open space;
8. Existing roads and structures;
9. Potential connections with existing open space, parks and trails.

C. **Open Space Management Plan.** An open space management plan, as described in Section 7.7 of this Chapter, shall be prepared and submitted with the preliminary plat application. The management plan will be reviewed as a supporting document of the

preliminary plat. Review and recommendations to the governing body on the proposed open space management plan will be prepared by the Planning Board.

D. **Instrument of Permanent Protection Required.** An irrevocable covenant prohibiting further subdivision, division or development of the open space lots or parcels as provided in 70-17-201, et seq., MCA, shall be provided for the open space concurrent with the application for final plat approval (76-3-509(2)(c), MCA).

E. **Maximum Density.** The maximum number of dwelling units shall be calculated by dividing the gross area of the subject property, including the open space, by the required lot area of the underlying zoning district. In the case where the subject property is not zoned, the maximum density shall be calculated by dividing the gross area of the property by the minimum lot area to meet MDEQ standards. Unless prohibited by MDEQ standards, the applicant need not demonstrate the development capability of the land to calculate the maximum dwelling unit density.

F. **Other Requirements.** The applicant shall adhere to all other applicable requirements of the underlying zoning district(s) with the exception of minimum lot area per dwelling unit (See maximum density above). The proposed number of dwelling units shall not exceed the maximum density but each dwelling unit may be placed on a lot of less than the minimum lot area required by the underlying zoning district(s). Subsequent to a preliminary plat approval, the applicant shall apply for and receive a zoning variance (under Section 27-1500, BMCC) from the minimum lot area required within the zoning district(s).

Section 7.5 Open Space.

A. At least thirty percent (30%) of the gross area of a cluster development shall be reserved as open space.

B. **Resource Protection Areas.** The following are considered resource protection areas and are required to be included within the open space when present. These resource areas must be mapped and shown on the preliminary plat.

1. The 100-year floodplain.
2. Riparian zones of at least 75 feet in width along all perennial and intermittent streams.
3. Areas of at least 5,000 square feet with percent grade of 25% or greater.
4. Wetlands that meet the definition used by the Army Corps of Engineers pursuant to the Clean Water Act.
5. Populations of endangered or threatened species, or habitat for such species.
6. Archaeological sites, cemeteries and burial grounds or historic sites listed as such with any state or federal agency.

C. **Other Resource Areas.** The following are considered important resource areas and may or may not be included within the open space at the discretion of the subdivider.

1. Historic sites or structures not listed as such with state or federal agencies.
2. Existing native forests or prairie of at least one (1) acre contiguous area.
3. Other significant natural features and scenic view sheds such as ridge lines, peaks and rock outcrops, particularly those that can be seen from public roads.
4. Prime agricultural lands of at least two (2) contiguous acres.
5. Existing trails that connect the tract to neighboring areas.
6. Areas at the base of any ridge line or rimrock of at least one (1) contiguous acre.

D. Above-ground utility rights-of-way and small areas of impervious surface may be included within the protected open space. Such areas shall make up not more than 5% of the required open space area.

E. At least 75% of the open space shall be in a contiguous tract of a minimum size of one acre. The open space should adjoin any neighboring areas of open space, other protected areas, and non-protected natural areas that would be candidates for inclusion as part of a future area of protected open space.

F. The open space should be directly accessible to the largest practicable number of lots within the subdivision. Non-adjoining lots shall be provided with safe, convenient access to the open space.

Section 7.6 Permitted Uses of Open Space.

A. Uses of Open Space may include the following:

1. Conservation of natural, archeological or historical resources;
2. Meadows, woodlands, wetlands, wildlife corridors, game preserves, or similar conservation-oriented areas;
3. Walking, bicycle trails or other multi-use trails as defined in the Heritage Trail Plan;
4. Passive recreation areas, such as open fields;
5. Active recreation areas;
6. Agriculture, horticulture, silviculture or pasture uses, provided that all applicable best management practices are adhered to;
7. Landscaped storm water management facilities approved by the County, community wastewater disposal systems and individual wastewater disposal systems located on soils particularly suited to such uses;
8. Easements for drainage, access, and underground utility lines; and
9. Other conservation-oriented uses compatible with the purposes of this Chapter.

B. **Prohibited uses of Open Space.**

1. Golf courses;

2. Roads, parking lots and impervious surfaces, except as specifically authorized in the previous Sections;
3. Agricultural and forestry activities not conducted according to accepted Best Management Practices;
4. Impoundments; or
5. Other activities as determined by the subdivider and recorded on the legal instrument providing for permanent protection.

Section 7.7 Ownership and Management of Open Space.

A. **Ownership of Open Space**. Open space shall be owned by one of the following entities:

1. The open space may be dedicated to the public as public parkland. Acceptance of the open space shall be at the discretion of the governing body, as recommended by the Yellowstone County Park Board; or

2. A Homeowners' Association representing residents of the subdivision may own the open space. Membership in the association shall be mandatory and automatic for all homeowners within the subdivision and their successors. The Homeowners' Association shall have lien authority to ensure the collection of dues from all members.

B. **Management Plan.** The subdivider shall submit a plan for management of open space and common facilities (Management Plan) that:

1. Allocates responsibility and guidelines for the maintenance and operation of the open space and any facilities located thereon, including provisions for ongoing maintenance and for long-term capital improvements;

2. Estimates the costs and staffing requirements needed for maintenance and operation of, and insurance for, the open space and outlines the means by which such funding will be obtained or provided;

3. Provides that any changes to the Management Plan be approved by the Planning Department, or in the case of publicly owned open space, approved by the Yellowstone County Park Board; and

4. Provides for enforcement of the Management Plan.

C. **Maintenance**.

1. Open space dedicated to the public shall be maintained according to the Management Plan by a Park Maintenance District (PMD) to be established prior to final plat approval.
2. Open space owned by a Homeowners' Association shall be maintained according to the management plan by the Homeowners' Association.

Section 7.8 Legal Instrument for Permanent Protection of Open Space.

A. **Legal Instrument**. Privately owned open space shall be protected in perpetuity by an irrevocable covenant prohibiting further subdivision, division, or development of the open space lots or parcels as provided in 70-17-201, et seq., MCA that is recorded with the deed. The instrument for permanent protection shall include clear restrictions on the use of the open space. These restrictions shall include all restrictions contained in this Chapter, as well as any further restrictions the applicant chooses to place on the use of the open space.

B. **Tax Assessment of Open Space**. Once a legal instrument for permanent protection has been placed upon the open space, the Yellowstone County Board of Assessment shall be directed to reassess the open space at a lower value to reflect its more limited use. If the open space is used purely for passive recreational purposes and the terms of the instrument for permanent protection effectively prohibit any type of significant economic activity, then the assessment shall be at a value of zero.

Section 7.9 Planned Neighborhood Development General Requirements.

A Planned Neighborhood Development (PND) project is intended to encourage the use of improved techniques for the development and arrangement of a mixture of land uses more than is available under conventional zoning regulations or land restrictions that separate land uses into distinct zones. It is further the intent of PNDs to allow for the integration of housing, business and community facilities, and to allow for the preservation of the natural environment through efficient utilization of open space.

A. A PND may be applied to any mixed use subdivision of five (5) or more lots. The subdivision shall be generally consistent with the adopted Growth Policy. The underlying zoning district(s), land use designations, building setbacks and other limitations shall be used as a general guide. The subdivider is encouraged to design the PND to allow a mixture of land uses, densities, setbacks and building heights.

B. The maximum size of any proposed lot within a PND is 350,000 square feet.

C. The minimum size for any area designated for common use by the residents or owners within the PND or by the public is one contiguous acre. The area may be designated for active or passive recreation, for conservation purposes, or for any other use in common by the residents and owners of the PND or by the public.

D. Planned Neighborhood Developments are exempt from the review criteria in Chapter 3.2.H. of these Regulations.

E. Planned Neighborhood Developments are exempt from the parkland dedication requirements in Chapter 10 in so far as the PND meets or exceeds parkland dedication requirements of Section 10.2.

F. Planned Neighborhood Developments shall comply with all other requirements of these Regulations.

G. Planned Neighborhood Developments shall be considered a Special Review use for purposes of Section 27-1500 of the Unified Zoning Regulations.

Section 7.10 Design Standards and Applications for Planned Neighborhood Developments.

A. The PND shall follow the applicable review procedures, as outlined in Chapter 3 of these Regulations.

B. **Site Analysis Map.** If an environmental assessment is required as part of the preliminary plat application it should include the following information on a site analysis map:

1. Property boundaries;
2. All streams, rivers, lakes, wetlands and other hydrologic features;
3. Topographic contours with a minimum of 5-foot intervals; where lots are proposed on slopes 10% or less, contours must be shown at 2-foot intervals;
4. All proposed Open Space areas;
5. General vegetation characteristics;
6. General soil types;
7. The planned location of protected Open Space;
8. Existing roads and structures;
9. Potential connections with existing open space, parks and trails.

C. Planned Neighborhood Developments are allowed in any zoning district as a Special Review use. Each land use area within a Planned Neighborhood Development will not be a separate zoning district but will apply for and receive special review approval (see Section 27-1500, BMCC for procedure) concurrently with the preliminary plat application. The Planned Neighborhood Development shall provide opportunities for mixed land uses, including various housing types and densities, recreational opportunities, and areas for neighborhood services such as schools, community centers, fire or police stations, libraries and places of employment.

D. **Master Plan:** A master plan must be submitted showing the proposed design and land use areas of the development. The master plan should be of sufficient detail to determine build-out population, traffic circulation and control requirements, permitted uses or mix of uses within each area, building envelopes for each developed lot, recreation areas and open space. If open space is provided it shall conform to the requirements of Sections 7.5 through 7.8 of this Chapter.

The master plan must also show development phasing and construction timing for each phase of the subdivision including any construction or improvements for public parks, trails, community centers, fire and police stations, schools or other public facilities that will serve the Planned Neighborhood Development. Each development phase must contain mixed uses and housing densities. Common elements such as playgrounds, parks, neighborhood service areas and community centers must be included within each phase of the development.

E. The Planned Neighborhood Development may be consistent with any adopted Growth Policy, Neighborhood Plan, Heritage Trail Plan, Transportation Plan, and any other pertinent public facilities or land use plan that may apply to the PND subdivision area.

Section 7.11 Examples of Cluster Development designs.

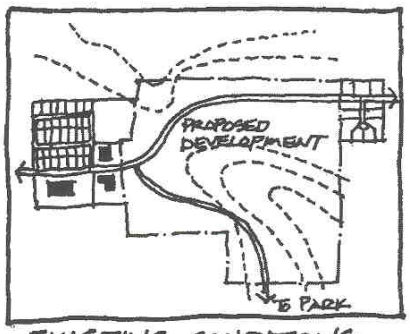

EXISTING CONDITIONS

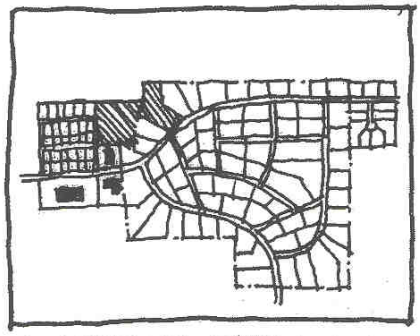

CONVENTIONAL SUBDIVISION

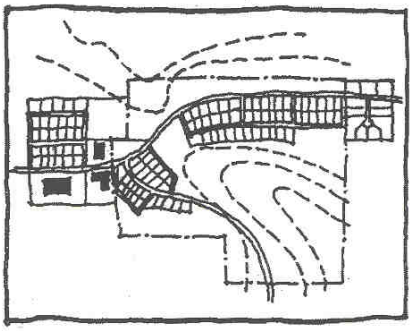

CLUSTER SUBDIVISION

Section 7.12 Examples of Planned Neighborhood Developments Designs.

Chapter 8.0 CONDOMINIUMS AND TOWNHOMES.

Section 8.1 Condominium and Townhome or Townhouse Development.

A. **Exemptions.** All condominium, townhome, or townhouse developments are subdivisions subject to the terms of these Regulations and the Montana Subdivision and Platting Act (MSPA), except those exempted by 76-3-203, MCA, as described below.

1. The approval of the original subdivision of land expressly contemplated the construction of the condominiums, townhomes, or townhouses and any applicable park dedication requirements in 76-3-621, MCA are complied with; or

2. The condominium, townhome, or townhouse proposal is in conformance with applicable local zoning regulations when local zoning regulations are in effect.

B. **Procedures.** All condominium, townhome, or townhouse developments which are not exempt from subdivision review, are subject to the applicable procedures contained in Chapter 3, Subdivision Review Procedures or Chapter 6, Subdivisions for Rent or Lease. The applicable subdivision procedure will be based on:

1. Whether a division of land is to be created.

2. The number of proposed units.

3. Whether the land is a first or subsequent minor subdivision.

Section 8.2 Condominium and Townhome Standards.

A. Condominium and townhome developments shall comply with those standards contained in Chapter 4, Development Requirements and Chapter 10, Parks, Trails and Open Space.

B. All buildings and structures in a condominium or townhome development shall be located at least twenty (20) feet from the property line adjoining a public right-of-way or private access easement, and ten (10) feet from all other perimeter property lines.

C. Condominium, townhome, and townhouse developments shall comply with all applicable provisions of the Unit Ownership Act – Condominiums, Title 70, Chapter 23, MCA, as amended.

Chapter 9.0 ENVIRONMENTAL ASSESSMENT.

Section 9.1 Purpose.

The environmental assessment is a tool by which to evaluate a proposed subdivision's impact on the natural environment, adjacent properties, local services, and the community as a whole. From this evaluation the most appropriate course of action can be determined to mitigate any negative impacts created by the subdivision. The environmental assessment is required by Section 76-3-603, MCA, unless otherwise exempted.

Section 9.2 General Requirements.

A. **Major Subdivision (76-3-603(1),MCA).** The subdivider shall provide an environmental assessment with the submittal of a preliminary plat containing the following information:

1. A description of the surface and ground water, geology and soils, vegetation, and wildlife use within the area of the proposed subdivision, as required by Section 9.3 **Environmental Description Contents**, of these Regulations.

2. A community impact report containing an analysis of anticipated impacts of the proposed subdivision on the community and local services as required by Section 9.4 **Community Impact Report Contents**, of these Regulations.

3. A summary of probable impacts of the proposed subdivision based on the criteria described in 76-3-608, MCA, as required by Section 9.5 **Summary of Probable Impacts**, of these Regulations.

4. Additional relevant and reasonable information related to the applicable regulatory criteria per Section 76-3-501, MCA as may be required by the Board of County Commissioners or designee.

B. **Subsequent Minor Subdivision.** An environmental assessment must accompany the preliminary plat and shall include only the summary of probable impacts of the proposed subdivision based on the criteria described in 76-3-608, MCA, as required by Section 9.5 **Summary of Probable Impacts**, of these Regulations.

C. **Exemptions.** The following subdivisions shall not be required to submit an environmental assessment:

1. A first minor subdivision from a tract of record (76-3-609(3), MCA).

2. A subdivision qualifying for expedited review as described in Section 3.5 of these Regulations.

3. A subdivision that satisfies all of the following criteria (76-3-608(7), MCA):

a. The proposed subdivision is completely within an area adopted by the Growth Policy pursuant to 76-1-601 et seq., MCA.

b. The proposed subdivision is located within zoning pursuant to 76-2-203 or 76-2-304, MCA, that avoids, significantly reduces, or mitigates adverse impacts identified in a growth policy that includes the provisions of 76-1-601(4)(c); and

c. The proposed subdivision is located within an area where a long-range public works development program (i.e. Capital Improvements Plan) has been adopted pursuant to 76-1-601(4), MCA. (only applies where one exists)

Section 9.3 Environmental Description Contents.

A. **Surface Water.**

1. Locate on a plat overlay or sketch map all surface water and the delineated floodways that may affect or be affected by the proposed subdivision including natural water systems (streams, lakes, rivers, or marshes), artificial water systems (canals, ditches, aqueducts, reservoirs, irrigation or drainage systems), and land subject to flooding.

2. Describe all surface water that may affect or be affected by the proposed subdivision including name, approximate size, present use, and time of year that water is present.

3. Describe the proximity of proposed construction (such as buildings, sewer systems, roads) to surface water.

4. Describe any existing or proposed stream bank or shoreline alterations and/or any proposed construction or modification of lakebeds or stream channels. Provide information on the location, extent, type, and purpose of any proposed alteration.

5. Please indicate which of the following water quality permits have been or will be applied for and describe the reasons why these permits are required.

PERMIT	AGENCY
310 Permit	Local Conservation District
SPA 124 Permit	Department of Fish, Wildlife and Parks
Floodplain Permit	County Floodplain Administrator
Section 404 Permit, Section 10 Permit	U. S. Army Corps of Engineers
318 Authorization	Department of Environmental Quality
Navigable Rivers Land Use License or Easement	Department of Natural Resources and Conservation

B. **Groundwater**.

1. Using available information, provide the estimated seasonal minimum and maximum depth to the water table, dates on which these depths were determined, and the location and depth of all known aquifers that may be affected by the proposed subdivision.

2. Provide a description of any steps necessary to avoid the degradation of groundwater and groundwater recharge areas.

C. **Geology/Soils/Slopes.**

1. Using available information, locate on a plat or overlay any known geologic hazards affecting the proposed subdivision which could result in property damage or personal injury due to any of the following: rock falls or slides; land, mud or snow slides; high water table, unstable or expansive soil conditions, slopes greater than twenty five percent (25%).

2. Explain the measures that will be taken to prevent or materially lessen the danger of future property damage or injury due to existing geologic hazards.

3. Provide a statement describing any unusual soil, topographic or geologic conditions on the property, which may limit the capability for construction or excavation using ordinary and reasonable techniques. The statement should address conditions such as shallow bedrock, high water table, unstable or expansive soil conditions, and slope. Describe the location and amount of any cut or fill three (3) or more feet in depth. Where cuts or fills are necessary, describe prevention of erosion and the promotion of revegetation, such as replacement of topsoil and grading.

4. Include soil reports obtained from the U.S.D.A., Natural Resource and Conservation Service (NRCS) containing the physical properties and engineering indices for each soil type, the soil limitations for sanitary facilities, building site development, and water features for each soil type. Describe any special design methods planned to overcome the soil limitations.

D. **Vegetation.**

1. Indicate the distribution of the major vegetation types and identify critical plant communities as identified by the NRCS.

2. Describe measures to preserve trees and critical plant communities (e.g., design and location of roads, lots and open spaces).

E. **Wildlife**.

1. Describe species of fish and wildlife that inhabit the area affected by the proposed subdivision.

2. Identify on an exhibit map any known critical or "key" wildlife areas, such as big game winter range, big game migration routes, waterfowl nesting areas, habitat for rare or endangered species, and wetlands.

3. Submit the impacts of the proposed development on fish and wildlife as identified by the Montana Department of Fish, Wildlife and Parks (MFWP). Provide a written statement outlining any recommendation of MFWP and any mitigation efforts to mitigate adverse impacts.

Section 9.4 Community Impact Report Contents.

A. **Impact on Agriculture/ Agricultural Water User Facilities.**

1. Describe the number of acres in crop production and whether the property is in whole or in part a viable farm unit, e.g. was the property under production during the last regular season.

2. Describe the uses of land within the vicinity of the proposed subdivision.

3. Describe existing irrigation rights on the property and whether the rights will be transferred, retained by the original owner, or severed.

4. Explain any modification or relocation of ditches or any easements to be provided with the subdivision. The subdivider shall notify the affected ditch company of the subdivision and shall obtain permission to reroute or alter the ditch in any way.

B. **Impact On Local Services And The Public Health And Safety.**

1. **Water Supply.**

   a. Describe how water will be provided for domestic use and fire protection.

   b. Indicate the number of gallons per day of water the proposed subdivision will require and whether the water supply is sufficient to meet the needs of the anticipated population of the subdivision. Describe any anticipated effects on existing water systems or wells within the area.

c. Based on available information, specify whether the proposed water supply satisfies the standards set forth by MDEQ for quality, quantity and construction criteria. Unless cisterns are proposed information should be obtained from one or more of the following sources:

   i Well logs or testing of onsite or nearby wells;

   ii Information contained in published hydrogeological reports; or

   iii As otherwise specified by the rules adopted by the MDEQ pursuant to 76-4-104, MCA.

d. If connection to an existing public, community, or shared water system is proposed, identify and describe the existing system and approximate distance to the connection from the proposed subdivision.

   i Provide written evidence that permission to connect to that system has been obtained.

   ii Provide information regarding the capacity of the existing water system and its adequacy for serving the proposed subdivision.

e. If a new community or shared water system is proposed, identify who will install that system, and how the system will be maintained.

f. If individual water systems are proposed, describe the adequacy of supply of groundwater for individual wells or cisterns and the method used to determine adequacy.

2. **Sewage Disposal.**

a. Describe the proposed method of sewage disposal.

b. Indicate the number of gallons of effluent per day that will be generated by the proposed subdivision at full occupancy, whether the proposed method of sewage disposal is sufficient to meet the anticipated needs of the subdivision, and whether it meets the standards of MDEQ.

c. If connection to an existing public sewer system is proposed, provide a description of the system and the approximate distance from proposed subdivision.

i. Provide written evidence from the appropriate sewer jurisdiction granting permission to connect to that system shall be submitted with the preliminary plat.

ii. Provide information regarding the installation, maintenance and phasing of any proposed public sewage disposal system.

d. If a new community or shared sewer system is proposed, identify who will install that system, and how the system will be maintained.

e. If individual septic systems are proposed, describe the location and specifications of septic systems.

3. **Solid Waste Disposal.**

a. Provide evidence that there is an existing solid waste collection and disposal system available that can accommodate the anticipated additional volume.

b. If no existing collection and disposal system is available, describe the proposed method of solid waste collection and disposal.

c. Describe how the proposed system satisfies the standards set forth by MDEQ.

4. **Storm water**.

a. Provide calculations indicating how much storm water run-off will be generated as a result of the proposed development.

b. Provide a description of the proposed storm water collection and drainage systems that satisfy the standards set forth by Section 4.7.

5. **Roads.**

a. Describe any proposed access roads or substantial improvements to existing public or private access roads.

b. If connections to any existing roads are proposed, identify all access permits that are necessary from the city, county or state.

c. Discuss whether any of the individual lots or tracts have access directly to arterial roads.

d. Explain any proposed closure or modification of existing roads.

e. Describe provisions considered for dust control on roads.

f. Explain how road maintenance will be provided to meet MDEQ guidelines for prevention of water pollution and erosion.

g. Indicate who will pay the cost of installing and maintaining the roads.

h. Discuss how much daily traffic will be generated on existing local and neighborhood roads and main arterials when the subdivision is fully developed.

i. Indicate the capacity of existing and proposed roads and if they are capable of safely handling the increased traffic resulting from the proposed subdivision. Describe any additional maintenance that will be necessary due to increased traffic and who will pay the cost of maintenance.

j. Indicate ownership of any private access to the subdivision, including private driveway easements.

6. **Utilities.**

a. Indicate which utility companies are proposed to serve the subdivision.

b. State the method of furnishing electric, natural gas or telephone service, the extent to which these utilities will be placed underground, and the estimated completion of each utility installation.

c. Indicate if there are any existing utility lines on the property such as transmission lines, pipelines, etc. and if so, describe the impacts they may have on the proposed subdivision.

7. **Emergency Services.**

a. Describe the emergency services available to the subdivision including fire protection, police protection, ambulance, and medical services.

b. Provide an estimate of the number of responses generated by the subdivision, and the method of determining those numbers.

c. Describe roads to the subdivision and provide information on compaction standards and widths that satisfy the requirements set forth for emergency vehicle access.

d. In the event that the proposed subdivision is located within the Wildland Urban Interface (WUI), the subdivider shall submit a plan to mitigate fire hazard in accordance with the fire department having jurisdiction.

e. Describe any health or safety hazards on or near the subdivision, such as mining activity, high-pressure gas lines, dilapidated structures or high voltage power lines. These conditions should be accurately described and their origin and location identified and any proposed mitigation.

8. **Schools.**

a. Describe the available educational facilities that would service this subdivision.

b. Provide an estimate of the number of school children that will be generated from the proposed subdivision and provide the basis for the estimate.

c. Provide information regarding whether increased enrollment can be accommodated by the present personnel, facilities and the existing school bus system. This should include any recommendations of the administrator(s) and plans to mitigate adverse impacts of the proposed development on the provision of educational services.

9. **Parks and Recreation Facilities.**

a. Describe any park and recreation facilities to be provided within the proposed subdivision and other recreational facilities that may serve the subdivision.

b. State how the required parkland dedication is being satisfied.

C. Land Use.

1. Indicate compliance with zoning encompassing all or part of the proposed subdivision. If the proposed subdivision is located near the jurisdictional area of an incorporated city or town, state whether annexation is proposed.

2. Describe how the subdivision will affect access to any public lands. Where public lands are adjacent to or near the proposed development, describe present and anticipated uses for those lands.

3. Describe the effect of the subdivision on adjacent land uses.

4. Describe any on-site or off-site land uses creating a nuisance, such as unpleasant odors, unusual noises, dust or smoke.

D. **Historical Features.**

Provide a letter from the State Historic Preservation Office (SHPO) indicating whether any historic features such as paleontological, archeological or cultural sites, structures, or objects are present on the subject property. If such features are present, provide a written statement outlining any recommendations of SHPO and any plans for inventory, study and/or preservation and mitigation for any adverse impacts.

E. **Visual Impact.**

1. Describe any efforts to visually blend development activities with natural surroundings.

2. If the subdivision is located near the Yellowstone River or the rimrocks, describe any potential impacts to these natural amenities. Discuss any mitigation efforts to preserve the views.

3. Provide information regarding revegetation after construction and any proposed landscaping to be provided along streetscapes.

Section 9.5 Summary of Probable Impacts (76-3-603(1)(b), MCA)

A. Describe the effects the proposed subdivision has on the following:

1. Agriculture

2. Agricultural water user facilities

3. Local services

4. The natural environment

5. Wildlife and wildlife habitat

6. Public health and safety

B. Describe how the proposed subdivision complies with the following:

1. Survey requirements provided in Part 4 of the MSPA

2. These subdivision regulations

3. The subdivision review process as described in Chapter 3 of these Regulations

C. Describe how the proposed subdivision provides for easements for the location and installation of any planned utilities.

D. Describe how the proposed subdivision provides for legal and physical access to each lot and the required notation of that access on the plat.

Chapter 10.0 DEDICATION OF PARKS, TRAILS AND OPEN SPACE.

Section 10.1 Purpose.

The purpose of parkland dedication is to:

- Meet the goals and objectives associated with parks, open space, trails and other non-motorized transportation facilities in all of the adopted parks and land use plans within the jurisdiction, and their Amendments.
- Preserve critical wildlife habitat, wetlands, riparian areas, river and stream corridors.
- Preserve and protect historical and cultural features.
- Provide active and passive park land and open space that is accessible and functional for use by the residents of a specific development and, where preferred, by the community.

Section 10.2 Park Land Dedication Requirements (76-3-621, MCA).

A. Except as provided in Sections 10.8 and 10.9, a subdivider shall dedicate to the County a cash or land donation equal to:

1. 11% of the area of the net land proposed to be subdivided into parcels of one-half acre or smaller;

2. 7.5% of the area of the net land proposed to be subdivided into parcels larger than one-half acre and not larger than 1 acre;

3. 5% of the area of the net land proposed to be subdivided into parcels larger than 1 acre and not larger than 3 acres; and

4. 2.5% of the area of the net land proposed to be subdivided into parcels larger than 3 acres and not larger than 5 acres.

B. Park dedication requirements for subdivisions that provide for multi-family and condominium developments, and that provide permanent, multiple spaces for recreational camping vehicles or manufactured homes shall be in lieu of those provided in Section 10.2(A) and are as follows:

1. 11% of the area of the net land proposed to be developed at a density of one dwelling unit per half acre or less;

2. 7.5% of the area of the net land proposed to be developed at a density of between one dwelling unit per half acre and one dwelling unit per one acre;

3. 5% of the area of the net land proposed to be developed at a density of between one dwelling unit per one acre and one dwelling unit per 3 acres; and

4. 2.5% of the area of the net land proposed to be developed at a density of between one dwelling unit per 3 acres and one dwelling unit per 5 acres.

C. The Board of County Commissioners, in consultation with the subdivider, the Planning Board, and the Yellowstone County Park Board may determine suitable locations for parks and playgrounds and, provided that consideration is given to the preference of the subdivider, may determine whether the park dedication must be a land donation, cash donation, or a combination of both. In determining whether land or cash is suitable, proximity to existing parks, including schools and other public or private recreational facilities shall be considered by the Park Board.

D. A Park Maintenance District (PMD) shall be formed or expanded with any new parkland dedication. The PMD shall be formed prior to final plat approval.

Section 10.3 School Land Dedication in Lieu of Park Land Dedication (76-3-621(8), MCA).

Subject to the approval of the governing body and acceptance by the school district trustees having jurisdiction, a subdivider may dedicate land as required by Section 10.2 to a School District if the land is adequate to be used for school facilities or buildings.

Section 10.4 Linear Park Land Dedication for Trail Corridors.

To be consistent with the adopted park and land use plans, linear parks for trails may be counted toward the required park dedication pursuant to Section 10.2 of this Chapter. These parks shall provide corridors for trails and meet the following requirements:

A. The proposed linear park section is identified as part of the Heritage Trail Plan trail system.

B. The proposed linear park should be no more than twenty (20) feet in width except when designed to incorporate other park features as approved as part of a parks master plan.

C. Maintenance of the linear park is provided through a Park Maintenance District as with all other dedicated parks.

Section 10.5 Storm water Detention/Retention Ponds in Parks.

Storm water detention or retention ponds may be located within public park land, but such areas shall not count toward the park land dedication requirement unless they are designed and constructed to serve as an amenity to the park and fit into the planned uses and improvements to the park. An example of a storm water detention area that is an amenity to a park could be several ponds with water features connecting them designed to have a trail around them with picnic shelters.

Section 10.6 Determining Cash Contribution for Parkland.

If a cash contribution for parkland is being provided, the subdivider shall submit one of the following with the final plat application to verify the fair market value of the land being subdivided:

A. A Comparative Market Analysis performed by a licensed realtor that meets the following criteria:
   1. It provides the per acre sale price of at least 3 comparable parcels of land.
   2. The comparable sales must have occurred within 1 year of the date of the subdivision final plat application submittal.
   3. The comparable sales must be within 2 miles of the subdivision.

B. A raw land appraisal by a licensed appraiser.

C. The sale price of the property being subdivided if it was purchased within 1 year of the date of the subdivision final plat application submittal.

Section 10.7 Use of Dedicated Money or Land for Parks (76-3-621(5), MCA).

The Board of County Commissioners shall use the dedicated money or land for development, acquisition, or maintenance of parks to serve the subdivision and community as follows:

A. The governing body may use the dedicated money to acquire, develop, or maintain, within its jurisdiction, parks or recreational areas, or use the money for the purchase of public open space or conservation easements only if:
   1. The park, recreational area, open space, or conservation easement is within a reasonably close proximity to the proposed subdivision; and
   2. The governing body has formally adopted a park plan that establishes the needs and procedures for use of the money.

B. The governing body may not use more than 25% of the dedicated money for park maintenance.

Section 10.8 When Park Land Dedication May Not Be Required (76-3-621(3)(a-e), MCA).

The following subdivisions may not require parkland dedication:

A. A minor subdivision.

B. Land proposed for subdivision into parcels larger than 5 acres.

C. Subdivision into parcels that are all nonresidential.

D. A subdivision in which parcels are not created, except for condominiums and when that subdivision provides permanent multiple spaces for recreational camping vehicles or mobile homes (see Section 10.2.B. of this Chapter).

E. A subdivision in which only one additional parcel is created.

F. Cluster Developments and Planned Neighborhood Developments (see Sections 7.3.E. and 7.9.E. of these Regulations).

Section 10.9 Waiving Park Land Dedication Requirement (76-3-621(6), MCA).

The governing body shall waive the park dedication requirement if:

A. The subdivision provides for a planned unit development or other development with land permanently set aside for park and recreational uses sufficient to meet the needs of the persons who will ultimately reside in the development, and the area of the land and any improvements set aside for park and recreational purposes equals or exceeds the area of the dedication required under Section 10.2 of this Chapter.

B. The subdivision provides long-term protection of critical wildlife habitat, cultural, historical, or natural resources, agricultural interests, or aesthetic values, and the area of the land proposed to be subdivided, by virtue of providing long-term protection is reduced by an amount equal to or exceeding the area of the dedication required under Section 10.2 of this Chapter.

C. The area of the land proposed to be subdivided, by virtue of a combination of the provisions of Section 10.9.A. and B. of this Chapter, is reduced by an amount equal to or exceeding the area of the dedication required under Section 10.2 of this Chapter.

D. The subdivider dedicates land outside of the subdivision to be set aside for park and recreational uses sufficient to meet the needs of the persons who will ultimately reside in the subdivision, and the area of the land equals or exceeds the area of the dedication required under Section 10.2 of this Chapter.

Chapter 11.0 ADMINISTRATIVE PROVISIONS.

Section 11.1 Variances (76-3-506, MCA).

The Board of County Commissioners may grant reasonable variances from the design and improvement standards of these Regulations when strict compliance would result in undue hardship and the result would not affect public health and safety. The granting of a variance shall not have the effect of nullifying the intent and purpose of these Regulations. The governing body may not approve a variance that would permit structures within the 100-year floodplain, as defined in 76-5-101, MCA.

A. **Requesting a Variance**. The subdivider shall include with the submission of the preliminary plat a written statement describing the facts of hardship upon which the request for the variance is based. Each requested variance shall be deemed a separate application, to be processed concurrently with the preliminary plat. Information addressing each of the following findings shall accompany the application to be approved by the governing body. The governing body shall weigh the following criteria in determining undue hardship:

   1. The granting of the variance will not be detrimental to the public health, safety, or general welfare or injurious to other adjoining properties;

   2. Because of the particular physical surroundings, shape, or topographical conditions of the specific property involved, an undue hardship to the owner would result if the strict letter of the regulation was enforced;

   3. The variance will not result in an increase in taxpayer burden;

   4. The variance will not in any manner place the subdivision in nonconformance with any adopted zoning regulations; and

   5. The subdivider must prove that the alternative design is equally effective and the objectives of the improvements are satisfied.

B. In granting variances, the governing body may require conditions of approval that will, in their judgment, secure the objectives of these Regulations.

C. When any such variance is granted, the motion of approval of the proposed subdivision shall contain a statement describing the variance and the facts and conditions upon which the issuance of the variance is based.

D. An application for a variance is not necessary where Planned Neighborhood Developments are proposed, as modifications to the standards and requirements of these Regulations may be approved by the governing body.

Section 11.2 Amendments to Subdivision Regulations.

A. These Regulations may be amended by the Board of County Commissioners by their own motion or upon recommendation of the Planning Board to the County Commissioners.

B. Prior to amending these Regulations the Board of County Commissioners shall conduct a public hearing and public notice shall be given of the intent to amend these Regulations and of the public hearing by publication of the time and place of the hearing in a newspaper of general circulation in the County not less than fifteen (15) days prior to the date of the hearing.

Section 11.3 Corrections or Vacations of Recorded Final Plats and Supporting Documents.

A. Corrections to recorded final plats shall be processed as exempt plats pursuant to the requirements set forth in Appendix B, provided that there is evidence of at least one of the following (76-3-404, MCA):

1. There is a discrepancy in the map.

2. Material evidence is provided that does not appear on any map filed by the Yellowstone County Clerk and Recorder.

3. There is evidence that suggests alternate locations of lines or points.

4. The recorded plat does not positively show the location, size of lots or blocks, or the location or width of any street or alley, (76-3-614, MCA).

B. Corrections to a recorded Subdivision Improvements Agreement (SIA) or other supporting document of the final plat to which the governing body is party, may be submitted provided that they do not significantly alter the original approval. Requests to alter a recorded SIA or supporting document shall follow these procedures:

1. A written request to amend the recorded document shall be submitted to the Planning Department.

2. The request will be circulated for review by the agencies affected by the proposed amendment. The Planning Department will, in consultation with the affected agencies, submit a recommendation to the governing body.

3. A public hearing may be required based on the information received by the reviewing agencies. Notice of the public hearing shall be given in accordance with these Regulations.

4. The governing body may approve the request if it does not significantly alter the original approval and does not conflict with the review criteria set forth in these Regulations.

C. Any plat prepared and recorded in accordance with these Regulations may be vacated, either in whole or in part.

1. If the vacation affects five (5) or fewer lots it shall be processed as an exempt plat pursuant to the requirements set forth in Appendix B.

2. If the vacation affects six (6) or more lots it shall be reviewed as an amended plat pursuant to Section 3.6 of these regulations.

3. If the vacation includes public rights-of-way, the applicant must first obtain approval for the right-of-way vacation from the governing body in accordance with the applicable procedures. Title to the streets and alleys of the vacated portions may revert to one or more of the owners of the properties within the platted area adjacent to the vacated portions, as determined by the governing body or designee.

4. When any utility lines or any other public or private facility are located in a vacated street or alley, at the time of the reversion of the title to the vacated street or alley, the owner of the public or private utility facility shall be granted an easement over the vacated land to continue the operation and maintenance of the public or private utility facility.

Section 11.4 Corrections or Adjustments to Plats, Conditions and Supporting Documents after Preliminary Plat Approval.

A. Minor adjustments may be approved by the governing body or designee, in consultation with the appropriate agencies, prior to the filing of the final plat. Minor adjustments are those changes, which, in the opinion of the governing body or designee, do not affect the basic character of lots or blocks, do not affect the open space requirement, and do not affect the original street design. Minor adjustments shall not change existing Conditions of Approval or require additional conditions. Minor adjustments may require that a new plat be drawn; however they do not require that the plat be re-submitted for preliminary plat review.

B. Major adjustments are those which, in the opinion of the governing body or designee, substantially alter the basic design, or alter open space requirements of the subdivision. Changes to conditions of approval placed on the preliminary plat shall be considered major adjustments unless otherwise determined using the criteria in Section 11.4.C., below. Any changes which constitute a major adjustment shall require that a new plat be drawn and the plat be re-submitted for preliminary plat review as specified in Chapter 3 of these Regulations.

C. **Requested Amendments to Conditions.** Upon written request of the subdivider, the governing body may amend conditions of preliminary plat approval where it can be found that errors or changes beyond the control of the subdivider have rendered a condition unnecessary, impossible or illegal. Requests to amend a condition of approval shall follow these procedures:

1. The request to amend the condition shall be submitted in writing to the Planning Department.

2. The request will be circulated for review by the agencies affected by the proposed amendment. The Planning Department will, in consultation with the affected agencies, submit a recommendation to the governing body.

3. A public hearing may be required based on the information received by the reviewing agencies. Notice of the public hearing shall be given in accordance with these Regulations.

4. The governing body may approve the request if it can be found that the original condition is unnecessary, impossible or illegal and does not conflict with the review criteria set forth in these Regulations.

D. Once the preliminary plat is approved, unless inaccurate or incomplete information has been found or a change to a condition has been requested, the governing body may not impose any additional conditions as a prerequisite to final plat approval, providing that approval is obtained within the original or extended approval period as provided in these Regulations.

Section 11.5 Appeals (76-3-625, MCA).

A. A person who has filed with the governing body an application for a subdivision under these Regulations may bring an action in District Court to sue the governing body to recover actual damages caused by a final action, decision, or order of the governing body or these Regulations that is arbitrary or capricious.

B. A party who is aggrieved by a decision of the governing body to approve, conditionally approve, or disapprove a proposed preliminary plat or final subdivision plat may, within 30 days after the date of the written decision, appeal to the District Court. The petition must specify the grounds upon which the appeal is made.

C. The following parties may appeal under the provisions of Section 11.5.B.:

1. The subdivider;

2. A landowner with a property boundary contiguous to the proposed subdivision or a landowner with property within the county or municipality where the subdivision is proposed if that landowner can show a likelihood of material injury to the landowner's property or its value;

3. The Yellowstone County Board of County Commissioners;

4. The City of Billings if a subdivision is proposed within three (3) miles of its limits.

D. For the purposes of this section, "aggrieved" means a person who can demonstrate a specific personal and legal interest, as distinguished from a general interest, who has been or is likely to be specially and injuriously affected by the decision.

Section 11.6 Schedule of Fees.

The required fee shall accompany the preliminary plat, final plat, exempt surveys, and any proposed variances. A schedule of fees for plats shall be established by the Board of County Commissioners by resolution, as set forth in Appendix O.

Section 11.7 Penalty for Violation.

A. Except as provided in 76-3-303, MCA, every final subdivision plat shall be filed with the County Clerk and Recorder before title to the subdivided land can be sold or transferred in any manner. If illegal transfers are completed, the County Attorney shall commence action to enjoin further sales or transfers and compel compliance with the provisions of the Montana Subdivision and Platting Act (76-3-101 et seq., MCA) and these Regulations. The cost of such action shall be imposed against the person transferring the property.

   Each sale, lease or transfer, or offer of sale, lease, or transfer of each separate parcel of land in violation of any provision of the Montana Subdivision and Platting Act or these Regulations shall be deemed a separate and distinct offense.

B. Any person who violates any of the provisions of the Montana Subdivision and Platting Act (76-3-101 et seq., MCA) or these Regulations is guilty of a misdemeanor and punishable by a fine of not less than one hundred dollars ($100.00) nor more than five hundred dollars ($500.00) or by imprisonment in jail for not more than three (3) months or by both fine and imprisonment.

Appendix A
Jurisdiction Map

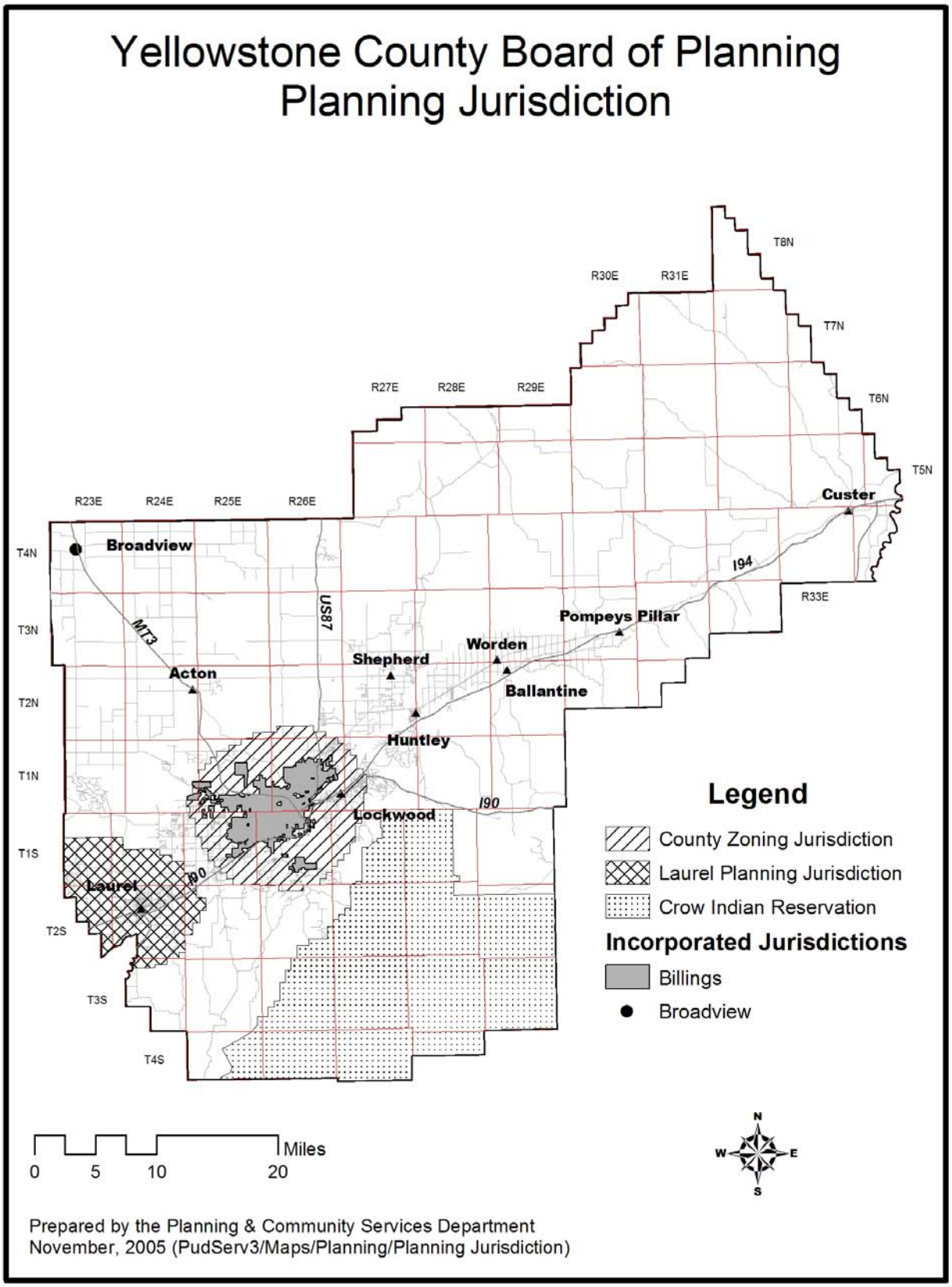

Yellowstone County Evasion Criteria

A. Purpose.

The State of Montana provides that certain divisions of land, which would otherwise constitute subdivisions, are exempt from local subdivision review and approval, unless the development is an attempt to evade the Montana Subdivision and Platting Act (MSPA), 76-3-101, et. seq., MCA.

The following procedures, criteria and requirements shall be used to review an exemption from subdivision review and to determine whether the division of land is for the purpose of evading the MSPA.

B. Procedures and General Requirements.

1. Any person seeking exemption from the requirements of the Subdivision and Platting Act (76-3-101 et. seq., MCA) shall submit to the Clerk and Recorder (1) a certificate of survey, exempt amended plat, or where a survey is not required an instrument of conveyance, and (2) evidence of, and a notarized statement affirming, entitlement to the claimed exemption signed by the landowner.

2. When a certificate of survey, exempt amended plat, or instrument of conveyance is submitted to the Planning Department, the Planning Department shall cause the documents to be examined by the designated agents of the governing body: (the County Public Works Department, County Attorney, Sanitarian, Treasurer, and Clerk and Recorder). The agents shall examine the proposed land division to determine whether it complies with the requirements set forth in this Appendix, the Montana Subdivision and Platting Act, and the Montana Sanitation in Subdivisions Act (76-4-101, et seq., MCA).

3. After the review to evaluate compliance with the requirements contained in this Appendix, the agents shall submit written comments as to whether the use of the exemption is intended to evade the purposes of the Act, after which a written recommendation will be presented to the governing body for its review.

4. If the designated agents find that the proposed use of the exemption complies with the statutes and these criteria, they shall recommend to the Clerk and Recorder to file the certificate of survey, exempt amended plat, or record the instrument of conveyance and accompanying documents. If the agents find that the proposed use of the exemption does not comply with the statutes and these criteria, they shall advise the Clerk and Recorder of their determination and recommend whether or not to file or record the documents, and upon his/her concurrence, the Clerk shall return the materials to the landowner with an explanation as to why the recordation was declined.

5. Any person whose proposed use of an exemption has been denied by the designated agents may appeal the agents' decision to the governing body. The person may request a hearing, and may submit additional evidence to show that

the use of the exemption in question is not intended to evade the Act.

If the governing body concludes that the information provided by the developer overcomes the recommendation by staff that the exemption is being used to evade the Act, they may authorize the use of the exemption in writing. A certificate of survey claiming such an exemption from subdivision review, which otherwise is in proper form, may be filed (or an exempt amended plat or an instrument of conveyance recorded) if the governing body has signed a certificate of an exemption as provided in these regulations.

6. Landowners or their representatives are encouraged to meet with the governing body's designated agents to discuss whether a proposed land division or use of an exemption is in compliance with these criteria.

   The agents may issue an advisory opinion only, and the opinion does not constitute a commitment by the local officials when the documents creating the proposed land division are submitted to the Clerk and Recorder.

7. The governing body and its agents, when determining whether an exemption is claimed for the purpose of evading MSPA, shall consider all of the surrounding circumstances. These circumstances may include but are not limited to: (1) the nature of the use of the parcel, (2) the prior history of uses of the particular tract in question, (3) the proposed configuration of the tracts if the proposed exempt transaction is completed, and (4) any pattern of exempt transactions that will result in the equivalent of a subdivision without local government review (State ex rel. Dreher v. Fuller, 50 St. Rptr 454, 1993).

8. Exempt divisions of land that would result in a pattern of development equivalent to a subdivision shall be presumed to be adopted for purposes of evading the Act. A "pattern of development" occurs whenever three (3) or more parcels of less than 160 acres each with common covenants or facilities pertaining to each parcel have been divided from the original tract.

9. If the use of an exemption is determined to be an evasion of MSPA, the landowner may submit a subdivision application for the proposed land division.

C Exemption as a Gift or Sale to a Member of the Immediate Family (76-3-207(1)(b), MCA).

1. Statement of Intent: The intention of this exemption is to allow a landowner to convey one parcel to each member of the immediate family without local subdivision review. A single parcel may be conveyed to each member of the immediate family under this exemption in each county where the landowner owns property. The parcel being divided must be outside of a platted subdivision.

2. "Immediate family" is defined as the spouse, children by blood or adoption, or parents of the grantor (76-3-103(8), MCA).

3. Any certificate of survey filed that would use this exemption to create a parcel for conveyance to a family member must clearly identify the name of the grantee, the grantee's relationship to the landowner, and the parcel to be conveyed under this exemption, and be accompanied by, or contain, the landowner's written certification of compliance. The certificate of survey or other instrument must also cite the exemption claimed and include the language provided in Section H Certification. of this Appendix. Also, the certificate of survey or instrument of conveyance shall be accompanied by a deed or other conveying document.

4. One conveyance of a parcel to each member of the landowner's immediate family is eligible for exemption from subdivision review. However, the use of the exemption may not result in more than one remaining parcel of less than 160 acres.

5. Any proposed use of the family conveyance exemption to divide a tract that was previously created through use of an exemption shall be presumed to be an evasion of the Act if it creates a pattern of development consistent with an overall plan with characteristics such as common roads, utility easements, restrictive covenants, open space or common marketing. This presumption will not be rebutted by previous ownership of the tracts, and pertains to remaining tracts of less than 160 acres as well as to those tracts that were previously created through the use of one or more of the exemptions.

6. The use of the family conveyance exemption to divide tracts that were created as part of an overall development plan with characteristics such as common roads, utility easements, restrictive covenants, open space or a common marketing or promotional plan shall be presumed that the use of the exemption is an evasion the Act.

D. Exemption to Provide Security for a Mortgage, Lien or Trust Indenture for the purpose of construction, improvements or refinancing (76-3-201(1)(b) MCA).

1. Statement of Intent: Under policies of many lending institutions and federal home loan guaranty programs, a landowner who is buying a tract with financing or through a contract for deed is required to hold title to the specific site on which the residence will be built, improved, or refinanced. The intended purpose of this exemption is to allow a landowner who is buying a tract using financing or a contract for deed to segregate a smaller parcel from the tract for security for financing construction of a home on the property.

2. When claiming this exemption, the landowner shall submit the following documents to the City-County Planning Department:

a. A signed statement from both the landowner and the lending institution that the creation of the exempted parcel is necessary for the owner to secure financing through a mortgage, lien or trust indenture on the exempted parcel for the purpose of construction, improvements to the land being divided, or refinancing purposes.

b. Any certificate of survey that uses this exemption must bear the acknowledged certificate of the property owner stating that the division of land in question is exempted from review as a subdivision, cite the exemption claimed, and include the language provided in Section H. Certification. of this Appendix.

3. The use of this exemption is presumed to have been adopted for the purpose of evading MSPA if:

a. It will create a site for more than one dwelling unit;

b. The loan is for someone other than the owner of record or the recorded contract purchaser of the parcel to be divided.

c. It will create a pattern of development which is equivalent to a subdivision with characteristics such as common roads, sewer, water, utility easements, restrictive covenants, open space or a common marketing or promotional plan.

E. Exemption for Agricultural Purposes (76-3-207 (1)(c), MCA).

1. Statement of Intent: The intention of this exemption is to allow a landowner to create a parcel without local review where the parcel will be used only for production of livestock or agricultural crops and where no residential, commercial, or industrial buildings will be built. The parcel being divided must be outside of a platted subdivision.

2. "Agricultural Purpose," for purposes of these evasion criteria, means the use of land for raising crops or livestock, or for the preservation of open space, and specifically excludes residential structures and facilities for commercially processing agricultural products. Agricultural lands are exempt from review by the Montana Department of Environmental Quality (MDEQ), provided the applicable exemption is properly invoked by the property owner.

3. The following conditions must be met or the use of the exemption will be presumed to have been adopted for the purposes of evading MSPA:

a. The parties to the transaction by gift, sale, or agreement, must enter into a covenant running with the land and revocable only by mutual consent of the governing body and the property owner that

the divided land will be used exclusively for agricultural purposes or open space. The covenant must be signed by the property owner, the buyer or lessee and the governing body. An example of a covenant is provided in Section H. of this Appendix.

b. The landowner must demonstrate that the planned use of the exempted parcel is for agricultural purposes and that no residential, commercial or industrial buildings will be built (e.g., a statement signed by the buyer).

c. Residential, commercial and industrial structures, including facilities for commercial processing of agricultural products are excluded uses on parcels created under this exemption unless the covenant is revoked and the land division is reviewed under MCA Title 76, Chapter 3.

d. A certificate of survey that uses this exemption must bear the acknowledged certificate of the property owner stating that the division of land in question is exempted from review as a subdivision, cite the exemption claimed, and include the language provided in Section H. of this Appendix.

F. Relocation of Common Boundary (76-3-207(1) (a, d, and e), MCA).

1. Statement of Intent: The intended purpose of this exemption is to allow a change in the location of a boundary line between two parcels and to allow a one-time transfer of a tract to effect that change in location without subdivision review.

2. If the relocation of a common boundary would result in the permanent creation of an additional parcel of land, the division of land must be reviewed as a subdivision. If a temporary tract is created, language shall be added to indicate that the temporary tract is merged forever with the adjacent tract.

3. Within a platted subdivision, a division of lots that redesigns or rearranges six or more lots must be reviewed and approved by the governing body and an amended plat must be filed with the County Clerk and Recorder in accordance with Section 3.6 of these Regulations.

4. Certificates of survey or amended plats claiming this exemption must be clearly distinguished between the existing boundary location and the new boundary. This shall be accomplished by representing the existing boundary with a dashed line and the new boundary with a solid line. The appropriate certification must be included on the certificate of survey as provided in Section H. of this Appendix.

G. Remainder Parcels.

Statement of Intent: Any part of an original tract of record, less than 160 acres that is left following the segregation of other parcels from the tract for the purpose of transfer shall be reviewed as part of the subdivision.

H. Certification.

1. **Exemption Certificates.** The following represents examples of certificates to be used on certificates of surveys for the following types of exemptions: relocation of common boundaries, land gift or sale to family member, agricultural exemption, and security for mortgages, liens or trust indentures.

CERTIFICATE OF EXEMPTION
(RELOCATION OF COMMON BOUNDARY)

I (We) certify that the purpose of this survey is to relocate common boundaries between adjoining properties existing outside of a platted subdivision *(or inside a platted subdivision) (or between a single lot within a platted subdivision and adjoining unplatted land)*. Therefore this survey is exempt from review as subdivision pursuant to Section 76-3-207 (1)(a), *(d), or (e),* MCA.

DATED THIS _____ day of _____, 20_____.

*(Signature)*_____
Property Owner(s)

CERTIFICATE OF EXEMPTION
(FAMILY GIFT OR SALE)

I (We) certify that the purpose of this survey is to create Tract # _____ for transfer of ownership as a family gift or sale and that no prior family sale has been conveyed to ((name), our (my) (relationship)_____ and that this exemption complies with all conditions imposed on its use. Therefore this survey is exempt from review as a subdivision pursuant to Section 76-3-207(1)(b), MCA, and the Yellowstone County Subdivision Regulations.

DATED THIS _____ day of _____, 20_____.

*(Signature)*_____
Property Owner(s)

CERTIFICATE OF EXEMPTION
(FOR AGRICULTURAL PURPOSES)

I (We) certify that the purpose of this survey is to create Tract #_____, as shown on this certificate of survey, for gift or sale, which is to be used for agricultural purposes only, and that this exemption complies with all conditions imposed on its use. Therefore, this survey is exempt from review as a subdivision pursuant to Section 76-3-207(1)(c), MCA and the Yellowstone County Subdivision Regulations.

I also hereby enter a covenant, to run with the land, that Tract _____ as shown hereon, will be used exclusively for agricultural purposes only. No building or structure requiring water or sewer facilities shall be utilized on Tract _____. This covenant is revocable only by the mutual consent of the governing body and the property owner.

DATED THIS _____ day of _____, 20_____.

*(Signature)*_____
Property Owner(s)

CERTIFICATE OF EXEMPTION
(SECURITY FOR MORTGAGE, LIEN OR TRUST INDENTURE)

I certify that the purpose of this survey is to create a parcel of land to provide security for mortgage or loan purposes and that this exemption complies with all conditions imposed on its use. Therefore, this survey is exempt from review as a subdivision pursuant to Section 76-3-201(1)(b) MCA and from review by the Montana Department of Environmental Quality (16.16.605(1)(b)).

DATED THIS _____ day of _____, 20_____.

*(Signature)*_____
Property Owner(s)

2. **Governing Body Certification.** If the exemption is approved after appeal to the Governing Body, the Governing Body shall so certify in a printed certificate on the certificate of survey.

I, Chairman of the Board of County Commissioners, do hereby certify that the use of the exemption claimed on the accompanying Certificate of Survey has been duly reviewed, and has been found to conform to the requirements of the MSPA, Section 76-3-101, et. Seq., MCA, and the Yellowstone County Subdivision Regulations.

DATED THIS _____ day of _____, 20_____.

(Signature) _____
Chairman, Board of County Commissioners

(Signature) _____
(Board of County Commissioners)

(Signature) _____
(Board of County Commissioners)

APPENDIX C
Preapplication Recommendations

The following information is recommended submittal material for all pre-application meeting requests. The analysis of the feasibility of the proposal by staff may depend on the amount of information that is provided. The submittal material must be provided to the Planning Department at least one week in advance of the scheduled pre-application meeting time.

Submittal Copies Required

__12_____ Copies of conceptual drawing and other supplemental materials

Conceptual drawing identifying the following:

1. Proposed subdivision name
2. Legal description including quarter Section, Township and Range and any underlying survey data
3. Owner, subdivider (if different from owner)
4. Proposed lot layout with approximate dimensions and size
5. Existing streets, roads, alleys and/or access easements within or adjacent to the subject property; subdivider shall provide documentation of legal and physical access to land being subdivided
6. Proposed legal and physical access to each lot and dimensions of right-of-way and street surfaces; proposed road names
7. Existing easements on or adjacent to the subject property (i.e. access, irrigation, utility, pipelines, trails, etc.)
8. Proposed easements
9. Location of all existing physical features on or adjacent to the subject property, including but not limited:
   - Structures
   - Above-ground utility lines
   - Irrigation facilities
   - Rock outcrops
   - Topographic features (hills, drainages, draws, etc.)
   - Streams, lakes, wetlands, areas within flood plain
10. Location of existing or proposed fire hydrants, or other fire suppression water source
11. Proposed layout of:
    - Water distribution system
    - Sanitary sewer system
    - Storm drainage facilities
12. Existing and proposed zoning, if applicable
13. Existing and proposed land use
14. Existing or proposed parkland or trail easements

Recommended Supplemental and Supporting Documentation

1. Vicinity map showing access to and from property
2. USGS Topographic map with subject property identified
3. Soils survey map with subject property identified
4. FEMA map if property is in or nearby a mapped floodplain
5. Well logs from adjacent properties
6. Zoning map showing subject property and surrounding property zoning
7. Photographs of site
8. When subject property is proposed to be subdivided in separate filings, a Master Plan of the entire area to be developed

Frequently Asked Questions at a Pre-Application Meeting

1. What type of review does the proposed subdivision require? (i.e. major, 1st minor, subsequent minor, expedited review, exempt, amended) Procedures for the appropriate review type will be explained.
2. Is the property within an existing subdivision or certificate of survey?
3. Is there an existing Subdivision Improvements Agreement?
4. Will the property be further subdivided?
5. Is there any right-of-way dedication necessary?
6. Does the Transportation Plan or Heritage Trail Plan affect the property?
7. Will the subdivision generate 500 Average Daily Trips (ADT)? Is so, Traffic Study is required.
8. Is annexation into the City limits proposed?
9. What improvements are necessary? (i.e. water, sewer, storm water management, street, sidewalk/trail)
10. Is public water and sanitary sewer service available or within 500’ of the property?
11. Will there be a need to request any variances from the Subdivision Regulations?
12. What is the proposed use of the subdivision?
13. Is the property zoned? Is a zone change proposed? Is a special review through zoning needed for the proposed uses?
14. How will parkland dedication requirements be met (if applicable)?
15. Is an Environmental Assessment required?
16. Is the property within a flood hazard area?
17. Are there existing irrigation water rights on the property? If so, how will they be delineated or severed? Will the irrigation facility be moved, altered or covered? Will stormwater be discharged into the irrigation facility?

APPENDIX D
Preliminary Plat Requirements

The following information is required for all preliminary plat submittals

Submittal Copies

_____	24”x36” plat and supplements (number of copies specified by staff)
_____	11”x17” plat and supplements (number of copies specified by staff)
___1___	Electronic copy of plat (in AutoCad ® or ArcInfo ® format) and supplements (a high quality scanned copy in .jpg or .pdf may suffice if other formats are unavailable)
___1___	Electronic copy of plat (in .jpg or .pdf format)

Plat Contents:

1. Subdivision name that does not duplicate an existing subdivision name
2. Legal description including quarter section, Township and Range
3. Owner, subdivider (if different from owner), engineer and surveyor
4. Date plat was prepared
5. North arrow and scale bar
6. Vicinity map
7. Names and addresses of adjoining property owners
8. Names of adjoining subdivisions and certificates of survey
9. Location of all existing physical features on land adjacent to and within subdivision, including but not limited to:
    - Structures
    - Utilities
    - Irrigation facilities
    - Rock outcrops
    - Areas of 25% slope or greater
10. Locations and dimensions of:
    - Proposed streets and street names that do not duplicate existing street names
    - Sidewalks and/or pathways, trails
    - Alleys, internal private streets, driveways
    - Easements
    - Parkland
    - Street centerline curve radii
11. Proposed layout of:
    - Water distribution system
    - Sanitary sewer system
    - Storm drainage facilities
    - Location of nearest available utilities
12. Lot lines, lot numbers, lot areas and block numbers

13. Site data including:
    - Number of lots
    - Maximum lot area
    - Minimum lot area
    - Area of parkland
    - Linear feet of streets
    - Net and gross acreage of land to be subdivided
    - Existing and proposed zoning
    - Existing and proposed land use
14. Tentative finished grades of each street indicated by spot elevations
15. Location of streams, lakes, wetlands, flood plain boundaries, and land subject to flooding
16. In case of a subsequent subdivision, the subdivision superimposed on a copy of the existing plat
17. All plats shall be neatly drawn in a professional manner
18. Contour lines of not more than five-foot intervals
19. Approximate location of all sections lines and corners pertinent to the proposed subdivision.

APPENDIX E
Preliminary Plat Application

Subdivision Name: _____

Date of Preapplication Meeting: _____

Type: Major _____ First Minor _____ Subsequent Minor _____

Tax Code: _____

Location:

Legal Description: _____

_____

1/4 Section: _____, Township: _____, Range: _____

General Location: _____

_____

Subdivider Information:

Name: _____

Address:

_____

Telephone: _____ Email:

_____

Owner Information:

Name:

_____

Address:

_____

Telephone: _____ Email:

_____

Plat Data:

Gross Area: _____

Net Area: _____

Number of Lots: _____

Maximum Lot Size: _____

Minimum Lot Size: _____

Linear Feet of Streets: _____

Existing Zoning: _____

Surrounding Zoning:

North: _____

South: _____

East: _____

West: _____

Existing Land Use: _____

Proposed Land Use: _____

Parkland Requirement:

Land: _____ Acres: _____

Cash: _____ Cash: $ _____

Variances Requested (list and attach Variance Request criteria answers found in Chapter 11.1.A. 1-5):

1. _____
2. _____

Service Providers for Proposed Subdivision

Gas: _____

Electric: _____

Telephone: _____

Rural Fire District:_____

Irrigation District:_____

Cable Television:_____

List of Materials Submitted with Application

1. _____
2. _____
3. _____
4. _____
5. _____
6. _____

Agent Information

Name: _____

Address:

_____

Telephone: _____ Email:_____

I declare that I am the owner of record of the above-described property, and have examined all statements and information contained herein, and all attached exhibits, and to the best of my knowledge and belief, is true and correct.

_____	_____
Owner of Record	**Date**
_____	_____
Owner Under Contract	**Date**

The submission of a preliminary plat application constitutes a grant of permission by the subdivider to enter the subject property (Sec. 1.9).

Supplemental and Supporting Documentation

1. Written documentation of legal and physical access to the land being subdivided.
2. Names and addresses of immediately adjoining property owners typed or neatly printed on address labels.
3. Draft Subdivision Improvements Agreement (Appendix K).
4. Environmental Assessment or Summary of Probable Impacts, when applicable (see Chapter 9).
5. Traffic Accessibility Study (TAS) when applicable, containing the following information:
    m. Trip generation, using the Institute of Transportation Engineers Trip Generation Manual;
    n. Trip distribution;
    o. Traffic assignment;
    p. Capacity analysis;
    q. Evaluation; and
    r. Recommended access plan, including access points, modifications and any mitigation techniques.
    s. Land use and trip generation in the form of a table of each type of land use, the number of units or square footage, as appropriate, the trip rates used (daily and peak) and resulting trip generation.
    t. Traffic graphics, which show:
        - AM peak hour site traffic;
        - PM peak hour site traffic;
        - AM peak hour total traffic;
        - PM peak hour total traffic;
        - Total daily traffic (with site generated traffic shown separately).
    u. AM and PM capacity analysis with an AM and PM peak hour capacity analysis provided for:
        - All major drive accesses that intersect collector or arterial streets or roads; and
        - All arterial-arterial, collector-collector and arterial-collector intersections within one mile of the site.
    v. Capacity. Indicate the levels of service (before and after development) of existing and proposed streets and roads, including appropriate intersections, to safely handle any increased traffic. Describe any anticipated increased maintenance that will be necessary due to increased traffic and who will pay the cost of maintenance.
    w. Bicycle and Pedestrian Pathways, Lanes and Routes. Describe bicycle and pedestrian pathways, lanes or routes to be developed with the development.
    x. Traffic Calming. Detailed drawings of any proposed traffic calming installations, including locations and turning radius templates.
6. Preliminary water and sanitation information, including:
    a. A site plan or exhibit that shows:
        – The location, within 100 feet outside of the exterior property line of

subdivision and on the proposed lots, of:
- Flood plains
- Surface water features
- Springs
- Irrigation ditches
- Existing, previously approved, and, for parcels less than 20 acres, proposed water wells and wastewater treatment systems;
- For parcels less than 20 acres, mixing zones identified, and
- The representative drainfield site used for the soil profile description, and

– The location, within 500 feet outside of the exterior property line of the subdivision, of public water and sewer facilities, if any.

b. A description of the proposed subdivision's water supply systems, storm water systems, solid waste disposal systems, and wastewater treatment systems, including whether the water supply and wastewater treatment systems are individual, shared, multiple user, or public as those systems are defined in rules published by the Montana Department of Environmental Quality (MDEQ).

c. A drawing of the conceptual lot layout at a scale no smaller than 1 inch equal to 200 feet that shows all information required for a lot layout document in rules adopted by MDEQ pursuant to 76-4-104, MCA.

d. Evidence of suitability for new onsite wastewater treatment systems that, at a minimum, includes:
   – A soil profile description from a representative drainfield site identified on the vicinity map, as provided above, that complies with standards published by the MDEQ,
   – Demonstration that the soil profile contains a minimum of 4 feet of vertical separation distance between the bottom of the permeable surface of the proposed wastewater treatment system and a limiting layer, and
   – In cases in which the soil profile or other information indicates that groundwater is within 7 feet of the natural ground surface, evidence that the groundwater will not exceed the minimum vertical separation distance

e. For new water supply systems, unless cisterns are proposed, evidence of adequate water availability;
   – Obtained from well logs or testing of onsite or nearby wells;
   – Obtained from information contained in published hydrogeological reports; or
   – As otherwise specified by rules adopted by the MDEQ pursuant to 76-4-104, MCA

f. A preliminary analysis of potential impacts to the groundwater quality from new wastewater treatment systems, using as guidance rules adopted by the Board of Environmental Review pursuant to 75-5-301 and 75-5-303, MCA related to standard mixing zones for groundwater, source specific mixing zones, and nonsignificant changes in water quality. The preliminary analysis may be based on currently available information and must consider the effects

of overlapping mixing zones from proposed and existing wastewater treatment systems within and directly adjacent to the subdivision. Instead of performing the preliminary analysis required under this subsection, the subdivider may perform a complete nondegradation analysis in the same manner as is required for an application that is reviewed under Title 76, Chapter 4.

g. A subdivider whose land division is excluded from review under 76-4-125(2) is not required to submit the water and sanitation information listed above.

7. Draft protective and restrictive covenants, if any.
8. Draft Articles of Incorporation when Homeowner's Association is proposed.
9. When a tract of land is to be subdivided in separate filings, a Master Plan of the entire area to be developed.

Supplemental and Supporting Documentation

1. Written documentation of legal and physical access to the land being subdivided.
2. Draft Subdivision Improvements Agreement (see Appendix K for template)
3. Traffic Accessibility Study (TAS) when applicable, containing the following information:
    a. Trip generation, using the Institute of Transportation Engineers Trip Generation Manual;
    b. Trip distribution;
    c. Traffic assignment;
    d. Capacity analysis;
    e. Evaluation; and
    f. Recommended access plan, including access points, modifications and any mitigation techniques.
    g. Land use and trip generation in the form of a table of each type of land use, the number of units or square footage, as appropriate, the trip rates used (daily and peak) and resulting trip generation.
    h. Traffic graphics, which show:
        - AM peak hour site traffic;
        - PM peak hour site traffic;
        - AM peak hour total traffic;
        - PM peak hour total traffic;
        - Total daily traffic (with site generated traffic shown separately).
    i. AM and PM capacity analysis with an AM and PM peak hour capacity analysis provided for:
        - All major drive accesses that intersect collector or arterial streets or roads; and
        - All arterial-arterial, collector-collector and arterial-collector intersections within one mile of the site.
    j. Capacity. Indicate the levels of service (before and after development) of existing and proposed streets and roads, including appropriate intersections, to safely handle any increased traffic. Describe any anticipated increased maintenance that will be necessary due to increased traffic and who will pay the cost of maintenance.
    k. Bicycle and Pedestrian Pathways, Lanes and Routes. Describe bicycle and pedestrian pathways, lanes or routes to be developed with the development.
    l. Traffic Calming. Detailed drawings of any proposed traffic calming installations, including locations and turning radius templates.
4. Preliminary water and sanitation information, including:
    a. A site plan or exhibit that shows:
        – The location, within 100 feet outside of the exterior property line of subdivision and on the proposed lots, of:
            - Flood plains
            - Surface water features
            - Springs
            - Irrigation ditches

- Existing, previously approved, and, for parcels less than 20 acres, proposed water wells and wastewater treatment systems;
- For parcels less than 20 acres, mixing zones identified, and
- The representative drainfield site used for the soil profile description, and

– The location, within 500 feet outside of the exterior property line of the subdivision, of public water and sewer facilities, if any.

b. A description of the proposed subdivision's water supply systems, storm water systems, solid waste disposal systems, and wastewater treatment systems, including whether the water supply and wastewater treatment systems are individual, shared, multiple user, or public as those systems are defined in rules published by the Montana Department of Environmental Quality (MDEQ).

c. A drawing of the conceptual lot layout at a scale no smaller than 1 inch equal to 200 feet that shows all information required for a lot layout document in rules adopted by MDEQ pursuant to 76-4-104, MCA.

d. Evidence of suitability for new onsite wastewater treatment systems that, at a minimum, includes:
   – A soil profile description from a representative drainfield site identified on the vicinity map, as provided above, that complies with standards published by the MDEQ,
   – Demonstration that the soil profile contains a minimum of 4 feet of vertical separation distance between the bottom of the permeable surface of the proposed wastewater treatment system and a limiting layer, and
   – In cases in which the soil profile or other information indicates that groundwater is within 7 feet of the natural ground surface, evidence that the groundwater will not exceed the minimum vertical separation distance

e. For new water supply systems, unless cisterns are proposed, evidence of adequate water availability;
   – Obtained from well logs or testing of onsite or nearby wells;
   – Obtained from information contained in published hydrogeological reports; or
   – As otherwise specified by rules adopted by the MDEQ pursuant to 76-4-104, MCA

f. A preliminary analysis of potential impacts to the groundwater quality from new wastewater treatment systems, using as guidance rules adopted by the Board of Environmental Review pursuant to 75-5-301 and 75-5-303, MCA related to standard mixing zones for groundwater, source specific mixing zones, and nonsignificant changes in water quality. The preliminary analysis may be based on currently available information and must consider the effects of overlapping mixing zones from proposed and existing wastewater treatment systems within and directly adjacent to the subdivision. Instead of performing the preliminary analysis required under this subsection, the subdivider may perform a complete nondegradation analysis in the same manner as is required for an application that is reviewed under Title 76, Chapter 4.

g. A subdivider whose land division is excluded from review under 76-4-125(2) is not required to submit the water and sanitation information listed above.

5. Draft protective and restrictive covenants, if any
6. Draft Articles of Incorporation when Homeowner's Association is proposed
7. When a tract of land is to be subdivided in separate filings, a Master Plan of the entire area to be developed

Yellowstone County

EXPEDITED FINAL PLAT APPLICATION

1. **Name of Subdivision** _____
2. **Location**
   a. Legal Description: _____
      ¼ Section: _____
      Township: _____
      Range: _____
   b. General location: _____
      _____
3. **Name, Address & Telephone Number of Subdivider**
   a. Name: _____
   b. Address: _____
   c. Telephone: _____
4. **Name, Address & Telephone Number of Owner**
   a. Name: _____
   b. Address: _____
   c. Telephone: _____
5. **Plat Data**
   a. Gross area: _____
   b. Net area: _____
   c. Number of lots: _____
6. **List of materials submitted with final application**

   Required:

   a. Final Plat
   b. Subdivision Improvements Agreement and Waiver
   c. Title Report
   d. Red lined check print

   Other:_____
7. **Deed restrictions or covenants?** Yes_____ No_____

   if yes, please attach copies.

8. **Name, address & telephone of professional consultant(s)**

Surveyor/engineer: _____

Address: _____

_____

_____

Attorney _____

Address: _____

_____

_____

Other _____

Address: _____

_____

_____

I declare that I am the owner of record and that all the statements and information contained in all exhibits transmitted herewith are true and correct. I hereby apply for approval of the final plat of:

_____

Owner/Owners: _____

_____

_____

_____

(Signature of Owner/Owners)

Owners under Contract: _____

_____

_____

_____

(Signature of Owners under contract)

Yellowstone County

FINAL PLAT APPLICATION

1. **Name of Subdivision** _____
2. **Location**
   a. Legal Description: _____
      ¼ Section: _____
      Township: _____
      Range: _____
   c. General location: _____
      _____
3. **Name, Address & Telephone Number of Subdivider**
   a. Name: _____
   b. Address: _____
   c. Telephone: _____
4. **Name, Address & Telephone Number of Owner**
   a. Name: _____
   b. Address: _____
   c. Telephone: _____
5. **Plat Data**
   a. Gross area: _____
   b. Net area: _____
   c. Number of lots: _____
6. **Park Requirement**
   a. Land: _____
   b. Cash: $ _____
7. **Date preliminary plat approved:** _____
8. **List of materials submitted with final application**

   Required:

   a. Final Plat
   b. Subdivision Improvements Agreement
   c. Conditions of Approval

d. Title Report

e. Red lined check print

Other:

_____

_____

_____

_____

_____

9. **Deed restrictions or covenants?** Yes_____ No_____

   if yes, please attach copies.

10. **Name, address & telephone of professional consultant(s)**

    Surveyor/engineer: _____

    Address: _____

    _____

    _____

    Attorney _____

    Address: _____

    _____

    _____

    Other _____

    Address: _____

    _____

    _____

I declare that I am the owner of record and that all the statements and information contained in all exhibits transmitted herewith are true and correct. I hereby apply for approval of the final plat of:

_____

Owner/Owners: _____

_____

_____

_____

(Signature of Owner/Owners)

Owners under Contract: _____

_____

_____

_____

(Signature of Owners under contract)

APPENDIX J
Final Plat Requirements

1. A final subdivision plat may not be approved by the governing body or filed by the County Clerk and Recorder unless it complies with the following requirements:

    a. Final subdivision plats must be legibly drawn with permanent ink or printed or reproduced by a process guaranteeing a permanent record and must be 18 inches by 24 inches or 24 inches by 36 inches overall to include a 1 1/2-inch margin on the binding side.

    b. Two signed copies on 3 mil. or heavier matte stable-base polyester film or equivalent must be submitted. (Only one required in County)

    c. If more than one sheet must be used to adequately depict the land subdivided, each sheet must show the number of that sheet and the total number of sheets included. All certifications must be placed or referred to on one sheet.

    d. A survey that modifies a filed subdivision plat must be entitled "amended plat of (lot, block and name of subdivision being amended)," and unless it is exempt from subdivision review by 76-3-201 or 76-3-207(1)(d) or (e), MCA, may not be filed with the County Clerk and Recorder unless it meets the filing requirements for final subdivision plats specified in these requirements.

2. A final plat submitted for approval must show or contain, on its face the following information. The surveyor may, at his or her discretion, provide additional information regarding the survey.

    a. A title or title block indicating the quarter section, section, township, range, principal meridian, county and, if applicable city or town, in which the subdivision is located. The title of the plat must contain the words "plat" and either "subdivision" or "addition".

    b. The name of the person(s) who commissioned the survey and the name(s) of the owner of the land to be subdivided if other than the person(s) commissioning the survey, the names of any adjoining platted subdivisions, and the numbers of any adjoining certificates of survey previously filed.

    c. Vicinity sketch of sufficient area to identify the location of the subdivision.

    d. A north arrow.

    e. A scale bar. The scale must be sufficient to legibly represent the required information and data on the plat.

    f. The location of, and other information relating to all monuments found, set, reset, replaced or removed as required by ARM 8.94.3001(1)(c).

        i. If additional monuments are to be set after the plat is filed, the location of these monuments must be shown by a distinct symbol, and the plat must bear a certification by the surveyor as to the reason the monuments have not been set and the date by which they will be set.

ii. All monuments found during a retracement that influenced the position of any corner or boundary indicated on the plat must be clearly shown as required by ARM 8.94.3001(1)(c).

g. The location of any section corners or corners of divisions of sections pertinent to the survey.

h. Witness and reference monuments and basis of bearings. For purposes of these the term "basis of bearings" means the surveyor's statement as to the origin of the bearings shown on the plat. The basis of bearings may refer to a particular line between monumented points in a previously filed survey document. If the plat shows true bearings, the basis of bearings must describe the method by which these true bearings were determined.

i. The bearings, distances and curve data of all boundary lines. If the subdivision is bounded by an irregular shoreline or body of water that is a riparian boundary, the bearings and distances of a meander traverse generally paralleling the riparian boundary must be given.

i. The courses along a meander line are shown solely to provide a basis for calculating the acreage of a parcel with one or more riparian boundaries as the parcel existed at the time of survey.

ii. For purposes of these regulations a line that indicates a fixed boundary of a parcel is not a "meander" or "meander line" and may not be designated as one.

j. Data on all curves sufficient to enable the re-establishment of the curves on the ground. For circular curves these data must at least include radius and arc length. For non-tangent curves, which must be so labeled, the plat must include the bearings of radial lines or chord length and bearing.

k. Lengths of all lines shown to at least tenths of a foot, and all angles and bearings shown to at least the nearest minute. Distance measurements must be stated in English units, but their metric equivalents, shown to the nearest hundredth of a meter, may be noted parenthetically.

l. All lots and blocks in the subdivision, designated by number, the dimensions of each lot and block, the area of each lot, and the total acreage of all lots. (Excepted parcels must be marked "Not included in this subdivision" or "Not included in this plat," as appropriate, and the bearings and lengths of these excepted boundaries must be shown.)

m. All streets, alleys, avenues, roads and highways; their widths (if ascertainable) from public records, bearings and area; the width and purpose of all road rights-of-way and all other easements that will be created by the filing of the plat; and the names of all streets, roads and highways.

n. The location, dimensions and areas of all parks, common areas and other grounds dedicated for public use.

o. The total acreage of the subdivision.

p. A narrative legal description of the subdivision as follows:

   i. If the parcel being subdivided is either an aliquot part of a U.S. government section or a U.S. government lot, the information required by this subsection is the aliquot or government lot description of the parcel.

   ii. If the plat depicts the division of a parcel or lot that is shown on a filed certificate of survey or subdivision plat, the information required by this subsection is the number or name of the certificate of survey or plat and the number of the parcel or lot affected by the survey.

   iii. If the parcel surveyed does not fall within (2)(p)(i) or (ii), above, the information required by this subsection is the metes-and-bounds description of the perimeter boundary of the subdivision.

   iv. If the plat establishes the boundaries of a subdivision containing one or more interior parcels, the information required by this subsection is the legal description of the perimeter boundary of the subdivision.

q. **Certificate of Surveyor** The dated signature and the seal of the surveyor responsible for the survey and a memorandum of any oaths administered under 76-3-405, MCA. The affixing of this seal constitutes a certification by the surveyor that the final plat has been prepared in conformance with the Montana Subdivision and Platting Act (76-3-101 through 76-3-625, MCA) and the regulations adopted under that Act.

r. **Certificate of Dedication** The dated, signed and acknowledged consent to the subdivision of the owner of the land being subdivided. For purposes of this rule when the parcel of land proposed for subdivision is being conveyed under a contract-for-deed, the terms "owner" and "owner of the land" refers to the seller under the contract-for-deed.

s. **If applicable, Consent to Platting**

t. **Certificate of Approval** Certification by the governing body that the final subdivision plat is approved.

u. **Notice of Approval** Statement that the final plat is approved by the Yellowstone County Board of Planning.

v. **Certificate of County Attorney** Certification that the plat has been reviewed an accepted by the County Attorney.

w. **Certificate of County Treasurer** Certification of county treasurer showing current tax payment.

x. If applicable, the owner's certificate of dedication of streets, parks, playground easements or other public improvements

y. Space for the clerk and recorder's filing information.

3. Supporting documentation shall consist of the following:

    a. Final plat application completed and signed;

    b. All documentation necessary to guarantee the complete installation of all required improvements including the Subdivision Improvements Agreement and any documents related to financial security for improvements;

    c. An original Title Report or Subdivision Guarantee prepared within the recent 6 months;

    d. Evidence that the Montana Department of Environmental Quality or Yellowstone County Public Health Department has approved the sewage disposal system and/or the water system. This applies to individual and public water supply and sewage disposal systems;

    e. Copies of protective and restrictive covenants, if any;

    f. Applicable final plat fee.

SUBDIVISION IMPROVEMENTS AGREEMENT
(NAME OF SUBDIVISION)
Table of Contents
(Yellowstone County)

I. Variances (page #)
II. Conditions that Run with the Land
III. Transportation
  A. Streets
  B. Traffic Control Devices
  C. Access
  D. Heritage Trail Plan
IV. Emergency Services
V. Storm Drainage
VI. Utilities
  A. Water
  B. Sanitary Sewer
  C. Power, Telephone, Gas, and Cable Television
VII. Parks/Open Space
VIII. Irrigation
IX. Weed Management
X. Soils/Geotechnical Study
XI. Phasing of Improvements
XII. Financial Guarantees
XIII. Legal Provisions

SUBDIVISION IMPROVEMENTS AGREEMENT

(*Name of Subdivision*)

This agreement is made and entered into this ____ day of _____, 20__, by and between *(Subdivider)*, whose address for the purpose of this agreement is **ADDRESS**, hereinafter referred to as "Subdivider," and YELLOWSTONE COUNTY, Montana, hereinafter referred to as "County."

WITNESSETH:

(for minor subdivisions insert the following)

WHEREAS, the plat of *(Subdivision Name)*, located in Yellowstone County, Montana, was submitted to the Yellowstone County Board of Planning; and

(*for major subdivisions, exclude above and insert the following*)

WHEREAS, at a regular meeting conducted on _____ day of _____, 20__, the Board of Planning recommended conditional approval of a preliminary plat of *(Subdivision Name)*; and

(both minor and major subdivisions insert the following)

WHEREAS, at a regular meeting conducted on _____ day of _____, 20__, the Yellowstone County Board of County Commissioners conditionally approved a preliminary plat of *(Subdivision Name)*; and

(for expedited review subdivisions, exclude above three whereas' and insert the following)

WHEREAS, the plat of *(Subdivision Name)*, located in Yellowstone County, Montana was submitted to the Yellowstone County Board of Planning as an expedited plat which was deemed to not require preliminary review; and

WHEREAS, a Subdivision Improvements Agreement is required by the County prior to the approval of the final plat.

WHEREAS, the provisions of this agreement shall be effective and applicable to *(Subdivision Name)* upon the filing of the final plat thereof in the office of the Clerk and Recorder of Yellowstone County, Montana. The Subdivision shall comply with all requirements of the Yellowstone County Subdivision Regulations, the rules, regulations, policies, and resolutions of Yellowstone County, and the laws and administrative rules of the State of Montana.

THEREFORE, THE PARTIES TO THIS AGREEMENT, for and in consideration of the mutual promises herein contained and for other good and valuable consideration, do hereby agree as follows:

I. VARIANCES

A. Subdivider has requested, and the County hereby grants, the following variances by the Board of County Commissioners from the strict interpretation of the County's Subdivision Regulations (Chapter 11, Yellowstone County Subdivision Regulations):

(Please insert any applicable variances in the provided 1,2,3… format and reasons for variance request)

1. Variance #1

II. CONDITIONS THAT RUN WITH THE LAND

(Please insert any applicable conditions in the provided A, B, C... format. The following are typical conditions that run with the land which may or may not be applicable to this subdivision)

A. Lot owners should be aware that this subdivision is being built in close proximity to prime deer and antelope habitat and it is likely that homeowners will experience problems with damage to landscaped shrubs, flowers, and gardens. The Montana Fish, Wildlife, and Parks Department does not provide damage assistance unless there is damage to commercial crops and/or a threat to public health and safety.

B. Lot owners should be aware that soil characteristics within the area of this subdivision, as described in the 1972 Yellowstone County Soil Survey, indicate that there could be potential limitations for proposed construction on the lots, which may require a geotechnical survey prior to construction.

C. No water rights have been transferred to the lot owners. Irrigation ditches that exist on the perimeter of this development are for the benefit of other properties. Perimeter ditches and drains shall remain in place and shall not be altered by the Subdivider or subsequent owners.

D. There is attached hereto a Waiver waiving the right to protest the creation of the special improvement district or districts which by this reference is expressly incorporated herein and made as much a part hereof as though fully and completely set forth herein at this point. The Waiver will be filed with the plat, shall run with the land, and shall constitute the guarantee by the Subdivider and property owner or owners of the developments described herein. Said Waiver is effective upon filing and is not conditioned on the completion of the conditions set forth in this Agreement. The Subdivider and owner specifically agree that they are waiving valuable rights and do so voluntarily.

E. Lot owners should be aware that portion(s) of this property lie within the floodplain/floodway, as depicted on the FEMA maps for this area. Please be advised that special development restrictions may apply within these specified areas.

F. Culverts and associated drainage swales shall not be filled in or altered by the subdivider or subsequent lot owners.

G. When required by road improvements, all fences and irrigation ditches in the public right-of-way adjacent to this subdivision shall be removed or relocated outside of the public right-of-way and any relocation outside of the public right-of-way shall be subject to securing and recording easements.

H. Future maintenance of all public (or common) improvements shall be done through one (1) or more RSID(s) created as part of the SIA for this subdivision.

III. TRANSPORTATION

The subdivider agrees to guarantee all improvements for a period of one (1) year from the date of final acceptance by Yellowstone County.

A. Streets

This section should include, but not be limited to the following:

- Rights-of-way widths
- Pavement widths and surface types
- Other required street improvements

B. Traffic Control Devices

- Location and type of proposed stop signs and/or signals
- Other required traffic control devices

C. Access

- Location and widths of proposed accesses
- Restrictions on access
- Other required access improvements

D. Heritage Trail Plan

Statement of whether subdivision is within the area of the Heritage Trail Plan

- Location and type of proposed trail or trail connection
- Ownership arrangement of trail corridor – easement or dedication
- Other required trail improvement

IV. EMERGENCY SERVICE

This section should include, but not be limited to the following:

- Location and specifications for emergency access road including width, base and surface material, blockade and required signage
- Water storage tanks/dry hydrants
- Urban Wildland Interface Code requirements (required for highly wooded areas)

V. STORM DRAINAGE

All drainage improvements shall comply with the provisions of the Section 4.7, Yellowstone County Subdivision Regulations, and a stormwater management plan shall be submitted to and approved by MDEQ, or its designee.

This section should include, but not be limited to the following:

- Description and location of existing and proposed detention facilities

- Any improvements to the existing system
- Other required improvements

VI. UTILITIES

A. Water

In accordance with Section 4.9 Yellowstone County Subdivision Regulations, this section should include, but not be limited to the following:

- Size of existing or proposed systems (wells to be installed)
- State Department of Environmental Quality approval (letter submitted with final plat)

B. Septic System

In accordance with Section 4.8 Yellowstone County Subdivision Regulations, this section should include, but not be limited to the following:

- Size of existing or proposed systems
- State Department of Environmental Quality approval (letter submitted with final plat)

C. Power, Telephone, Gas, and Cable Television

This section should include, but not be limited to the following:

- Services to be provided within the public right-of-way, existing or to be installed
- Width and location of required utility easements

VII. PARKS/OPEN SPACE

This section should include, but not be limited to the following:

- The parkland requirement for this subdivision
- Required park improvements to the park and timing of construction
- Required formation of a Park Maintenance District

For minor plats, where no parkland dedication is required, please insert the following statement:

There is no parkland requirement for proposed (Subdivision Name), as this is a minor subdivision [MCA 76-3-617(3) (a)].

VIII. IRRIGATION

This section should include, but not be limited to:

- Irrigation District affected by the proposed development

- Required mitigation efforts to protect the ditches during construction
- Location and width of existing and proposed onsite easements for ditches
- Water shares to be transferred

IX. WEED MANAGEMENT

All noxious weeds on the latest Yellowstone County Noxious Weed List shall be controlled on all properties in the subdivision.

The weed plan shall include the following and shall be referenced in this SIA:

- A Weed Management Plan must be filed and updated as needed for approval by the Yellowstone County Weed Department. Said weed management plan shall contain the noxious weeds being addressed and the plan for the control of those weeds. All associated cost for noxious weed control is the responsibility of the owner of record.

- A revegetation plan shall be submitted as part of the management plan. A seeding recommendation can be obtained from the Yellowstone County Weed Department pursuant to Section 7-22-2152, MCA. The Yellowstone County Weed Department reserves the right to revise these recommendations based on the required site inspection.

X. SOILS/GEOTECHNICAL STUDY

This section should include, but not be limited to:

- Results of geotechnical study, if one was required
- Construction restrictions and recommendations due to the results of the study
- Required mitigation efforts

XI. PHASING OF IMPROVEMENTS (include if applicable)

Description of each Phase including:

- Required improvements
- Timing of improvements
- Reference to release of lots (documentation)
- Restrictions on lot sales (documentation)
- Financial guarantees for improvements

XII. FINANCIAL GUARANTEES

Except as otherwise provided, Subdivider shall install and construct said required improvements by private contracts secured by bonds, irrevocable letters of credit, sequential development, or any other method that may be acceptable to the Planning Board and Board of County Commissioners. All engineering and legal work in connection with such improvements shall be paid by the contracting parties pursuant to said special improvement

district or private contract, and the improvements shall be designed by and constructed under the supervision of a professional engineer competent in civil engineering, licensed in the state of Montana. Upon completion of the improvements, the consulting Engineer shall file with the Public Works Department, a statement certifying that the improvements have been completed in accordance with approved, seal stamped, record drawings, along with all required post-construction certification per Section 4.6.C. of the Yellowstone County Subdivision Regulations.

(In the event that all required improvements are not installed and constructed prior to final plat approval, the Subdivider shall provide a monetary security guarantee in the amount of 125% of the estimated total cost by one (1) of the methods listed in Chapter 5 of the Yellowstone County Subdivision Regulations. If using a security, describe the method in this section)

XIII. LEGAL PROVISIONS

A. Subdivider agrees to guarantee all public improvements for a period of one year from the date of final acceptance by Yellowstone County.

B. The owners of the properties involved in this proposed Subdivision by signature subscribed herein below agree, consent, and shall be bound by the provisions of this Agreement.

C. The covenants, agreements, and all statements in this Agreement apply to and shall be binding on the heirs, personal representatives, successors and assigns of the respective parties.

D. In the event it becomes necessary for either party to this Agreement to retain an attorney to enforce any of the terms or conditions of this Agreement or to give any notice required herein, then the prevailing party or the party giving notice shall be entitled to reasonable attorney fees and costs.

E. Any amendments or modifications of this Agreement or any provisions herein shall be made in writing and executed in the same manner as this original document and shall after execution become a part of this Agreement.

F. Subdivider shall comply with all applicable federal, state, and local statutes, ordinances, and administrative regulations during the performance and discharge of its obligations. Subdivider acknowledges and agrees that nothing contained herein shall relieve or exempt it from such compliance.

G. Subdivider agrees to create any required (or expansion of existing) RSID(s) for future maintenance of all public (or common) constructed improvements prior to final plat approval.

IN WITNESS WHEREOF, the parties hereto have set their hands and official seals on the date first above written.

"SUBDIVIDER" *(Name of Subdivider)*

By:_____

Its:_____

STATE OF MONTANA)
: ss
County of Yellowstone)

On this _____ day of _____, 20__, before me, a Notary Public in and for the State of Montana, personally appeared _____, known to me to be the _____ of *(Subdivider)*, who executed the foregoing instrument and acknowledged to me that he/she executed the same.

_____
Notary Public in and for the State of Montana
Printed Name: _____
Residing at: _____
My commission expires: _____

This agreement is hereby approved and accepted by Yellowstone County, this ____ day of _____, 20__.

"COUNTY"
COUNTY OF YELLOWSTONE
MONTANA

County of Yellowstone
Board of County Commissioners

By: _____
Chairman

_____
Commissioner

_____
Commissioner

Attest: _____
County Clerk and Recorder

STATE OF MONTANA)
: ss
County of Yellowstone)

On this ____ day of _____, 20__, before me, a Notary Public in and for the State of Montana, personally appeared _____, _____, and _____, known to me to be the Board of County Commissioners and the County Clerk and Recorder, respectively, of Yellowstone County, Montana, whose names are subscribed to the foregoing instrument in such capacity and acknowledged to me that they executed the same on behalf of Yellowstone County, Montana.

_____
Notary Public in and for the State of Montana
Printed Name: _____
Residing at: _____
My commission expires: _____

Waiver of Right to Protest

FOR VALUABLE CONSIDERATION, the undersigned, being the Subdivider and all of the owners of the hereinafter described real property, do hereby waive the right to protest the formation of one or more Rural Special Improvement Districts (RSID's), which Yellowstone County may require.

This Waiver and Agreement is independent from all other agreements and is supported by sufficient independent consideration to which the undersigned are parties, and shall run with the land and shall be binding upon the undersigned, their successors and assigns, and the same shall be recorded in the office of the County Clerk and Recorder of Yellowstone County, Montana.

The real property hereinabove mentioned is more particularly described as follows:

Subdivision Description/Name

Signed and dated this _____ day of _____, 20__.

Subdivider/Owner
By: _____

Its: _____

STATE OF MONTANA)
: ss
County of Yellowstone)

On this ____ day of _____, 20__, before me, a Notary Public in and for the State of Montana, personally appeared _____, known to me to be *Subdivider/Owner Name*, the person who executed the forgoing instrument and acknowledged to me that he/she executed the same.

IN WITNESS WHEROF, I have hereunto set my hand and affixed my Notarial Seal the day and year hereinabove written.

_____
Notary Public in and for the State of Montana
Printed name:_____
Residing in Billings, Montana
My commission expires:_____

APPENDIX L
Letter of Credit Template

(Must be on Lender's Letterhead)
IRREVOCABLE STANDBY LETTER OF CREDIT

DATE: _____

BENEFICIARY:
Yellowstone County
Billings, MT 59101

APPLICANT: Subdivider's name
Subdivider's address

LETTER OF CREDIT NO. _____

EXPIRATION DATE: _____

AT: OUR COUNTERS PRESENTLY LOCATED AT
Lender's address here

AMOUNT: US$_____
NOT EXCEEDING: -US- ___spell out_____Dollars-

We hereby issue our Irrevocable Standby Letter of Credit available by your draft(s) drawn at sight on us and accompanied by the following documents:

1. Beneficiary's signed statement certifying that _____(subdivider's name)____, has failed to pay for required improvements concerning subdividing _____ Subdivision in Yellowstone County.
2. Copy of mandatory improvements.
3. The original Letter of Credit

This Letter of Credit sha1l be deemed extended without amendment for one year from the expiration date, unless thirty (30) days prior to any expiration date we shall notify you by Registered Mail that we elect not to consider this Letter of Credit renewed for any such period.

In any communication with us regarding this Letter of Credit, please make specific reference to our Letter of Credit No. at the top of this letter.

Drafts drawn under this Credit must bear the clause: "Drawn under _____ Bank Irrevocable Standby Letter of Credit No. _____ dated _____." The amount of each drawing must be endorsed on the reverse of this credit by the negotiating bank.

To the extent applicable hereto, this Letter of Credit is subject to the Uniform Customs and Practice for Documentary Credits, 1993 Revision, International Chamber of Commerce Publication, No. 500.

We hereby engage with you that draft(s) drawn and/or documents presented and negotiated under and in compliance with the terms of this Irrevocable Standby Letter of Credit will be duly honored upon presentation to us.

_____ BANK

By: _____

DECLARATION OF RESTRICTION ON TRANSFERS. AND CONVEYANCES

_____ SUBDIVISION

THIS DECLARATION is made this _____day of _____20__, by (insert owner's name) hereinafter referred to as "Declarant,"

WITNESSETH:

WHEREAS, the Declarant is the owner of all of the lots in _____ Subdivision, situated in Section __, Township ____. Range ____, PMM., Yellowstone County, Montana, hereinafter referred to as the "Subdivision"; and

WHEREAS, in connection with the filing of the plat for the Subdivision, the Declarant executed that certain Subdivision Improvements Agreement dated the _____day of _____, 20__ to Yellowstone County, which Agreement contains restrictions against the sale, conveyance or transfer of certain lots in the Subdivision until such time as a private contract has been executed providing for the installation and construction of required public improvements; and

WHEREAS, in order to more fully evidence the restriction against sale, conveyance, or transfer and to give third parties notice of such restrictions, the Declarant desires to execute and record this Declaration of Restrictions.

NOW, THEREFORE, in consideration of these premises, the Declarant, for itself and its successors and assigns, does hereby declare:

1. Except as hereinafter provided, the Declarant does hereby agree and declare that the following described lots shall not be sold, transferred, or conveyed to any third party unless and until a release has been executed and recorded in accordance with the provisions hereinafter appearing:

Phase II:

Lots ___ through ___, inclusive, Block ___; _____ Subdivision in Yellowstone County, according to the official plat on file in the office of the Clerk and Recorder of Yellowstone County, Montana (_#_lots total).

Phase III:

Lots ___ though ___, inclusive, Block ___; and Lots ___ through ___, inclusive, Block ___, _____ Subdivision in Yellowstone County, according to the official plat on file in the office of the Clerk and Recorder of Yellowstone County, Montana (_#_ lots total).

2. It is the express purpose and intent of this Declaration to restrict or preclude sale, transfer, or conveyance of the above-described lots until such time as a private contract has been executed and necessary funding guarantees provided, as the case

may be, providing for the construction and installation of those public improvements required under the above-described Subdivision Improvements Agreement which by reference thereto is hereby incorporated herein as though fully set forth at this point. It is anticipated, however, that the Declarant will develop _____ Subdivision, in distinct phases, upon providing for the installation and construction of the public improvement necessary to serve the particular phase. In that regard a release of some but not all of the above described lots may be executed and recorded from time to time, in accordance with the provisions hereinafter appearing, and upon the recording of said release, the covenants and restrictions contained herein with respect to the lots described in said release shall be deemed canceled and terminated, and of no further force and effect.

3. Upon compliance with the requirements for a private contract specified above, a release for the lot or lots affected thereby shall be executed and recorded by Yellowstone County, pursuant to the provisions contained in the said Subdivision Improvements Agreement. The execution and recording of said release shall be deemed conclusive evidence to all third parties purchasing or acquiring any lot described therein that the restriction against sale, conveyance, or transfer of said lot has been removed.

4. UNTIL SUCH RELEASE IS EXECUTED AND RECORDED, THIS DECLARATION SHALL SERVE AS NOTICE TO ALL THIRD PARTIES PURCHASING OR ACQUIRING ANY OF THE ABOVE-DESCRIBED LOTS OF THE EXPRESS RESTRICTIONS AGAINST ANY SUCH SALE, CONVEYANCE OR TRANSFER, AND OF THE TERMS AND CONDITIONS OF THE SAID SUBDIVISION IMPROVEMENTS AGREEMENT, AND SHALL FURTHER SERVE AS NOTICE THAT YELLOWSTONE COUNTY MAY ENFORCE ANY AND ALL LEGAL RIGHTS AND REMEDIES SPECIFIED IN THE SUBDIVISION IMPROVEMENTS AGREEMENT SHOULD THE TERMS OF THIS DECLARATION BE VIOLATED.

5. The terms, conditions, and restrictions contained in this Declaration shall not preclude or restrict the ability of the Declarant to (a) sell, convey, and transfer all of the above-described lots, all of the lots in one phase, or those lots remaining subject to the terms of this Declaration, as one unit or group, to a third party, parties or entities; provided, however, that such sale shall be subject to this Declaration and the lots shall continue to be subject to the restrictions herein provided against the sale, transfer and conveyance until a release has been executed and recorded; or (b) enter into sale and purchase agreements for individual lots; provided, however, that the deeds or other conveyance documents shall not be delivered to the prospective buyer nor shall the closing under any such sale and purchase agreements occur until such time as a release covering the affected lot has been executed and recorded.

6. The terms and conditions of this Declaration shall run with the land and shall be binding upon and shall inure to the benefit of the Declarant, Yellowstone County, and their successors and assigns.

IN WITNESS WHEROF, the Declarant has executed this Declaration the day and year first

above written.

(Name of Declarant)

_____

STATE OF MONTANA)
: ss.
County of YELLOWSTONE)

On this_____ day of _____, 20___, before me, a Notary Public in and for the State of Montana, personally appeared _____, known to me to be the person who signed the foregoing instrument and who acknowledged to me that he executed the same.

_____
Notary Public in and for the State of Montana
Printed name: _____
Residing at Billings, Montana
My commission expires: _____

FLOOD HAZARD EVALUATION

A. **Definitions. (Sec. 76-5-103, MCA) Whenever the following words and phrases are used in this Appendix, they shall be given the meaning attributed to them by this section.**

1. Channel: The geographical area within either the natural or artificial banks of a watercourse or drainway.
2. Flood: The water of any watercourse or drainway that is above the bank or outside the channel and banks of the watercourse or drainway.
3. Flood of 100-year Frequency (aka Base Flood): A flood having a one percent (1%) chance of being equaled or exceed in any given year. A 100-year flood is the same as a base flood.
4. Floodplain: The area adjoining the watercourse or drainway that would be covered by the floodwater of a flood of 100-year frequency, except for sheetflood areas that receive less than 1 foot of water per occurrence and are considered "zone B" by the federal emergency management agency.
5. Floodway: The channel of a stream and the adjacent overbank areas that must be reserved in order to discharge a base flood without cumulatively increasing the water surface elevation more than one half (1/2) foot.
6. Watercourse: Any depression two (2) feet or more below the surrounding land serving to give direction to a current of water at least nine (9) months of the year and having a bed and well-defined banks.

B. **General.**

1. Flood Hazard Areas (See 76-3-504, MCA): Land subject to being flooded by a flood of 100-year frequency as defined in this Appendix by the Federal Emergency Management Agency (FEMA), or land deemed to be subject to flooding by the City or County, may not be subdivided for building or residential purposes, or other uses that may increase or aggravate flood hazards to the public health, safety or welfare, or that may be prohibited by state or local floodplain or floodway regulations. Land deemed to be subject to flooding by the City or County may include (but is not limited to) land subject to shallow flooding, groundwater rise, historically flooded lands and lands located within 2,000 horizontal feet of the channel bank of the watercourse.

2. Where the 100-year floodway has been delineated by a FEMA Flood Insurance Rate Map (FIRM), a FEMA Floodway Map or a City- or County-approved study on land in a subdivision, the 100-year floodway boundary and 100-year floodplain boundary shall be shown on the plat of the subdivision and the area within the 100-year floodway shall be labeled as a “No-Build Zone.”

3. Where the subdivision is within a flood hazard area that has been identified by the City or County, a Flood Study shall be completed as outlined in Part B and Part C of this Appendix, and the 100-year floodway boundary and 100-year floodplain boundary shall be shown on the plat of the subdivision and the area within the 100-year floodway (see Figure 1) shall be labeled as a “No-Build Zone.”

C. **Flood Study Requirements.**

1. A Flood Study shall be required for a subdivision if:

    a. Any portion of a proposed subdivision is within 2,000 horizontal feet and less than 20 vertical feet from the channel bank of a watercourse draining an area of 25 square miles or more, and no official floodplain or floodway delineation (study) of the watercourse has been made; or

    b. The subdivision is within a flood hazard area that has been identified by the City or County.

2. The Flood Study shall be performed by a registered Professional Engineer experienced in this field of work. Upon the request of the City or County, the study shall be submitted to the Yellowstone County Floodplain Administrator and/or the Floodplain Management Section, Water Resources Division, Montana Department of Natural Resources and Conservation (DNRC) for review and comment. A copy of the Flood Study and written comment from County Floodplain Administrator and/or the DNRC shall be provided to the Planning Department.

D. **Flood Study Contents.** The Flood Study shall include the following:

1. Certification: Certification by a registered professional engineer, including license number, seal or stamp, signature and date.

2. Written Report: A narrative report containing a description of the study area, data collection, the type of modeling method used for both the hydrology and hydraulics, discussion of the parameters used, modeling results and conclusions.

3. Site Plan: An overall scaled site plan of the subdivision with location of lot lines and an identified scale for vertical and horizontal distance showing the following:

    a. Vicinity Map

    b. Watercourse

    c. 100-year floodplain and floodway boundaries

    d. Contours shown at intervals between one (1) foot and four (4) feet depending on the site, or at the discretion of the Floodplain Administrator.

    e. Cross-sections

    f. Bridges or other constrictions in the floodplain

    g. USGS gauging stations (if any)

    h. Location and elevation of a temporary benchmark(s) established within the subdivision and referenced to mean sea level with appropriate elevation

adjustment.

4. Cross-sectional information:

    a. Cross-section elevations and stations should be determined at points representing significant breaks in ground slope and at changes in the hydraulic characteristics of the floodplain (i.e., points where ground cover, soil, or rock conditions change). Elevations shall be reported in NAVD 88 or NGVD 29 datum.

    b. The number of cross-sections needed, and the distance between cross-sections will vary depending on the site, the slope of the watercourse, the slope of the channel, and the hydraulic characteristics of the reach. A minimum of four cross sections are required over the entire reach with at least two cross-sections at the property where the elevations are desired. Additional cross-sections shall be taken above, below and at bridges, control structures, or natural constrictions in topography.

    c. Each cross-section shall cross the entire floodplain. The cross-section alignment should be perpendicular to the general flow of the watercourse (approximately perpendicular to contour lines). Elevation stations should be recorded at the channel bank and within the channel to determine the channel bottom shape. Cross sections shall be reasonably spaced to accurately define the study area.

    d. A profile sheet scaled the same as a FEMA Flood Insurance Study showing the observed water surface profile, location of cross sections, subdivision boundaries, watercourse profile, and thalweg (lowest point of the channel bottom along the reach of the watercourse).

5. Bridges/Culverts/Pipes: Provide descriptions and sketches of all bridges, culverts and pipes within the reach, showing unobstructed waterway openings and elevations.

6. Water Surface: Base Flood elevation of the water surface is to be determined and shown on each valley cross section.

7. Supporting Documentation: Provide engineering reports of calculations and assumptions, historical references, research of published hydrology or calculations showing how hydrology was derived, and other documentation of research information.

8. Electronic Data: Provide maps and any other information provided for a Flood Study that may be utilized by FEMA that meets their specific guidelines for digital and electronic data. Please refer to FEMA's Flood Hazard Mapping Program at www.fema.gov/fhm/ for specific guidelines and specifications for data collection.

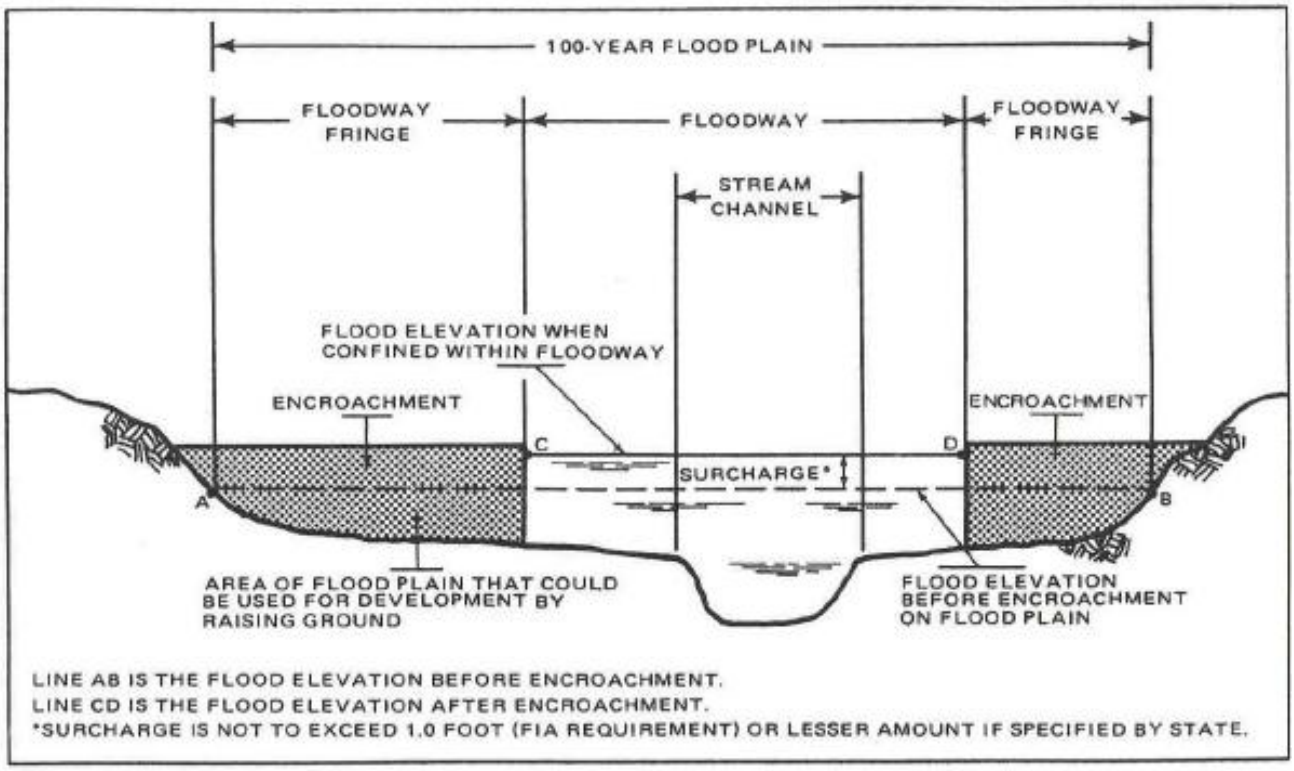

Figure 1. 100-Year Floodplain Cross-Section Diagram

APPENDIX O
Fee Schedule

Subdivision Application and Review Fees

Adopted by Ordinance #03-102, November 28, 2003,
and Amended by Resolution #06-135, December 18, 2006,
and Resolution #08-65, August 5, 2008, and Resolution #10-70, August 24, 2010.

Preliminary Major Plat	6 to 40 lots	$1,716.00
	41 to 200 lots	$4004.00
	Over 200	$5148.00
Preliminary Minor Plat		$629.00
Preliminary Subsequent Minor Plat		$629.00
Final Major Plat	6 to 40 lots	$458.00
	41 to 200 lots	$686.00
	Over 200	$1030.00
Final Minor Plat		$286.00
Final Subsequent Minor Plat		$286.00
Expedited Plat		$458.00
Exempt Plat		$200.00
Corrections or Vacations of Recorded Final subdivision plats or supporting documents		$229.00
Corrections or Adjustments to Plats, Conditions, and supporting documents after preliminary plat approval		
Minor Adjustments		$229.00
Major Adjustments		
	Major subdivisions affecting:	
	6 to 40 lots	$1,144.00
	41 to 200 lots	$3,432.00
	Over 200 lots	$4,576.00
	Minor subdivisions	$458.00
Subdivision Variances	Residential	$372.00
	Commercial	$458.00